REV	ECO#	DESCRIPTION	DATE
Draft		Initial Version	07May2019
0.9		Draft Release	27May2019
1.0		Final Release	06Aug2019
1.1		Release Update	20Dec2019

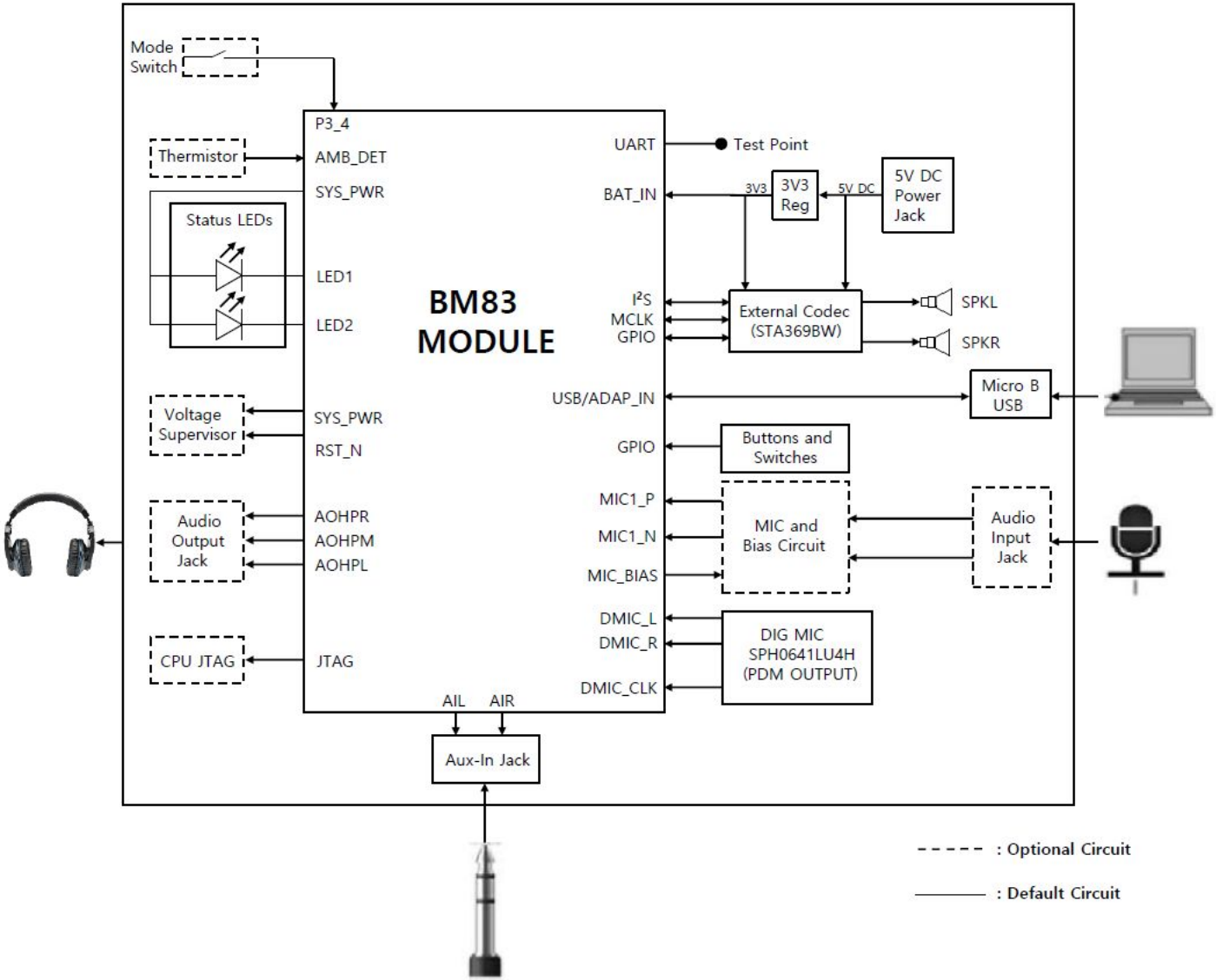

Drawn By: Chetan Bohra

Engineer: Chetan Bohra

PartNumber:

Project Title: *BM83 Reference Circuit for Embedded Mode*

Sheet Title: Revision History

Size: B | Sch #:03- | Revision:0.9 | Date: 2019/12/23 下午 05:12:26 | Sheet 1 of 4

File: 01_BLOCK DIAGRAM.SchDoc

Designed with Altium — Altium.com

SYSTEM CFG SWITCH (OPTIONAL)

MODE	P3_4
APP MODE	OFF
TEST MODE	ON

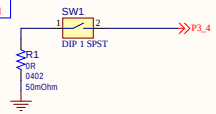

8051 MCU JTAG (OPTIONAL)

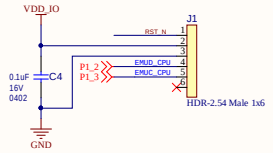

SYSTEM LED

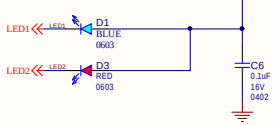

RESET Button (OPTIONAL)

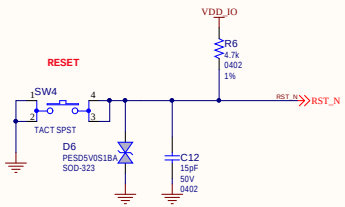

RESET IC (OPTIONAL)

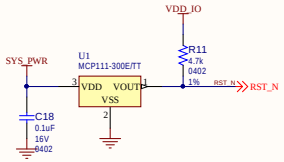

BM83 MODULE INTERFACE

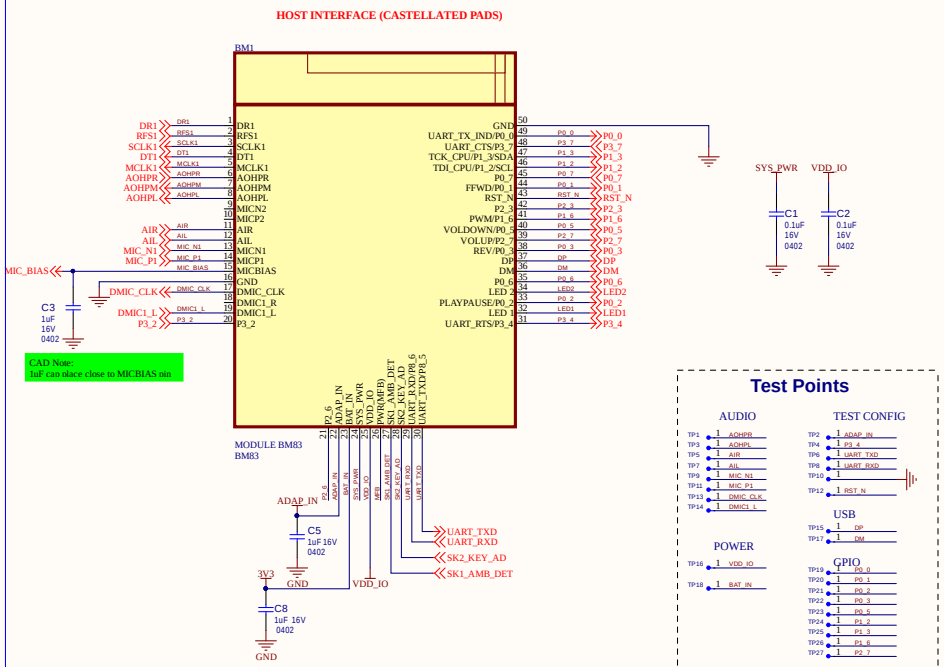

Test Points

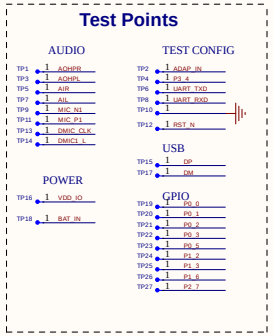

AUDIO CONTROL BUTTONS

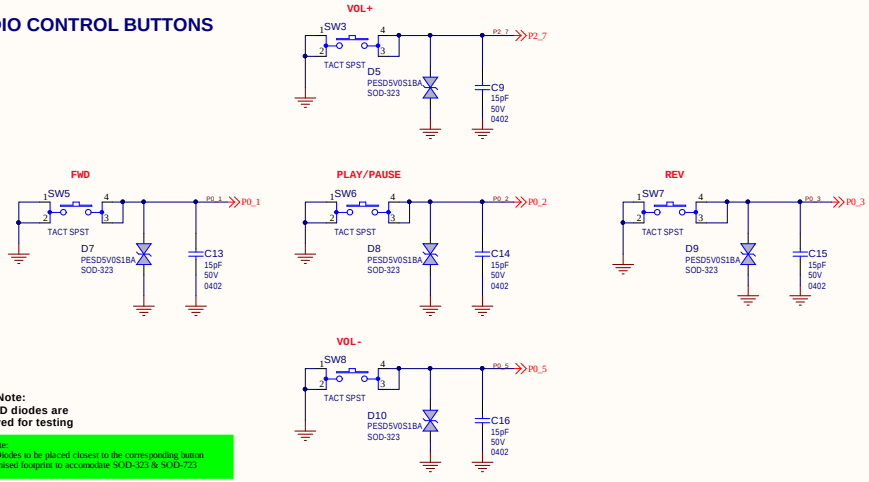

BOM Note:
All ESD diodes are reserved for testing

CAD Note:
1. ESD Diodes to be placed closest to the corresponding button
2. Customised footprint to accomodate SOD-323 & SOD-723

GPIO ASSIGNMENT TABLE

S.No.	PIN NAME	FUNCTION1	REMARKS
1	P0_0	DSP_RST	External DSP Codec Reset
2	P0_1	FWD	
3	P0_2	PLAY/PAUSE	
4	P0_3	REV	
5	P0_5	VOL-	
6	P0_6	PWM LED Drive	Muxed with PWM (SDK OPTION)
7	P0_7		
8	P1_2	8051 MCU-2 Wire Debug Data	Muxed with HW I2C (SCL)
9	P1_3	8051 MCU-2 Wire Debug Clock	Muxed with HW I2C (SDA)
10	P1_6	Fault Interrupt for ext. DSP Codec	
11	P2_3		
12	P2_6		
13	P2_7	VOL+	
14	P3_2	AUX_IN DETECT	
15	P3_4	SYS CFG (Test Mode)	
16	P3_7		

MFB POWER BUTTON

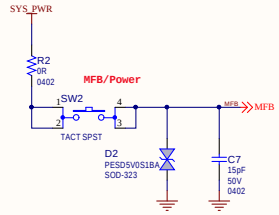

PWM LED Drive (OPTIONAL)

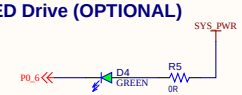

AMB DET (OPTIONAL)

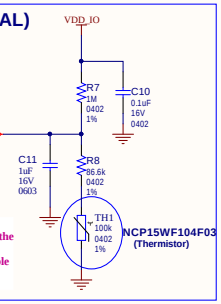

NOTE:
Thermistor must be placed close to the battery in the user application for accurate measurements and to enable the thermal shutdown feature.

Potentiometer (OPTIONAL)

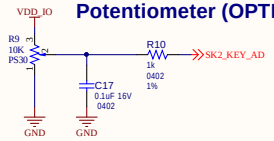

Drawn By: Chetan Bohra	MICROCHIP
Engineer: Chetan Bohra	
PartNumber:	Project Title: *BM83 Reference Circuit for Embedded Mode*
Sheet Title: BM83 Module Interface	Designed with Altium
Size: C / Sch #03- / Revision:0.9	Date: 2019/12/23 下午 05:12:26 / Sheet 2 of 4
File: 02_BM83 MODULE INTERFACE.SchDoc	Altium.com

5V DC POWER JACK

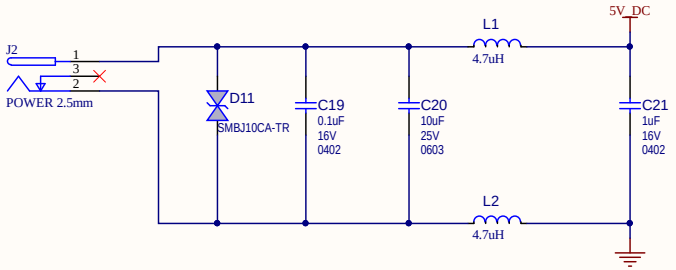

5V TO 3V3 GENERATION

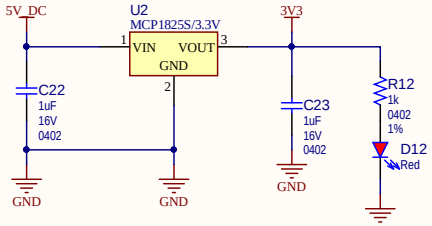

NOTE:
1). Using 3V3 LDO supply for BM83's BAT_IN, ensure there is no voltage drop when transient current is drawn from BM83 module.
2). Alternatively, make use of a LDO configured for 3V6 for BAT_IN, to provide additional margin to encounter the vtg drop due to transients.
3). Ensure the charger function is disabled in configuration tool.

USB CONNECTOR

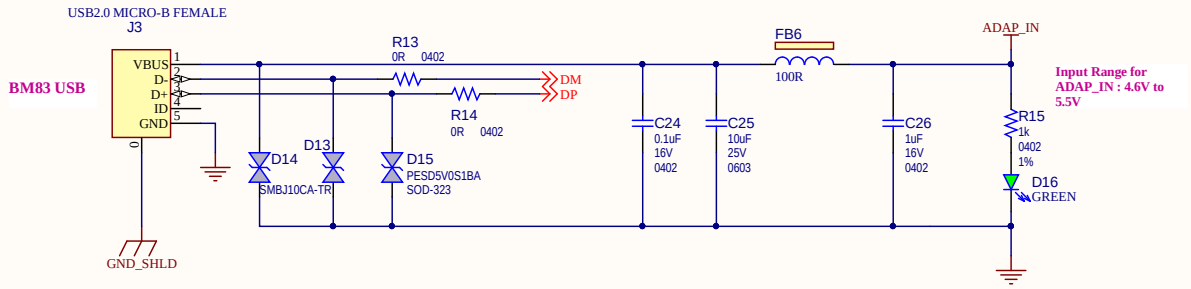

CAD Note:
ESD Diodes to be placed closest to the USB connector

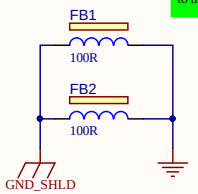

NOTE:
USB connector is used in following case:
1). DFU (Device Firmware Upgrade) in application mode.
2). Firmware update in Test mode

Drawn By: Chetan Bohra	MICROCHIP
Engineer: Chetan Bohra	
PartNumber:	Project Title: *BM83 Reference Circuit for Embedded Mode*
Sheet Title: Power Supply	Designed with Altium.com
Size: B	Sch #: 03- / Date: 2019/12/23 下午 05:12:26
	Revision: 0.9 / Sheet: 3 of 4
File: 03_POWER SUPPLY.SchDoc	

EXTERNAL CODEC (STA369BW)

NOTE: Voltage working range +5 to +26V

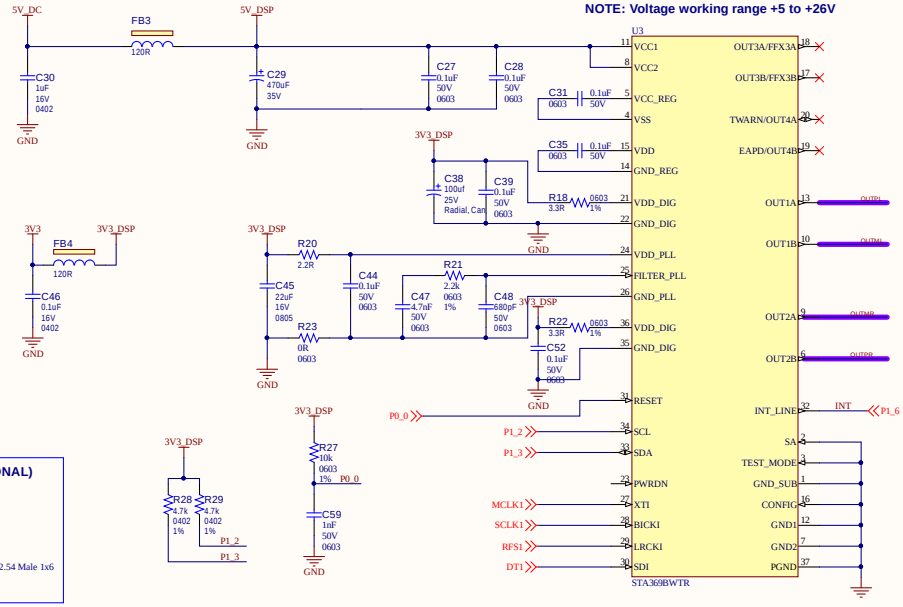

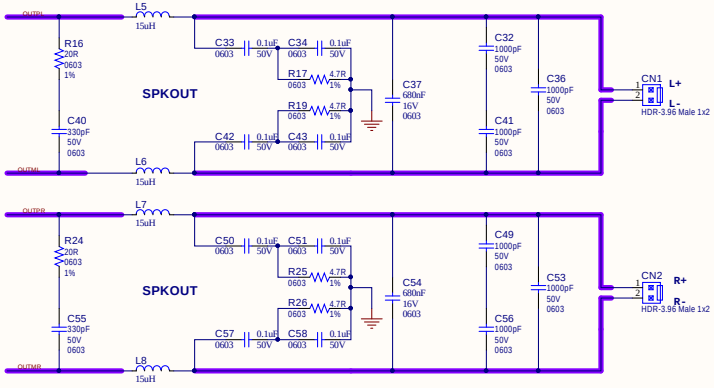

I2S Test Header (OPTIONAL)

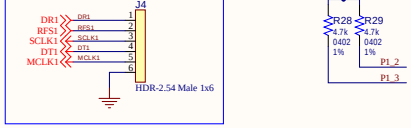

STEREO AUX LINE INPUT

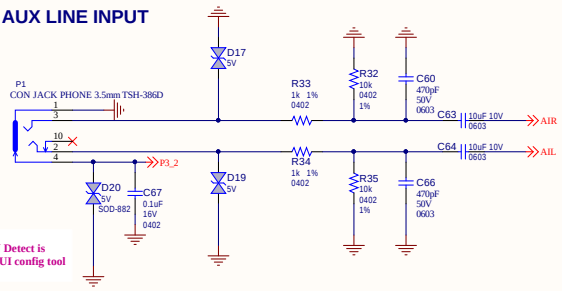

NOTE:
GPIO for AUX-IN Detect is configurable by GUI config tool

AUDIO HEADSET CAPLESS OUTPUT (OPTIONAL)

NOTE:
This is optional. Required for Headset application with internal codec.

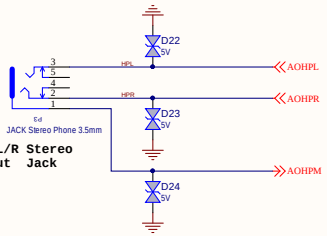

ANALOGY MICROPHONE (OPTIONAL)

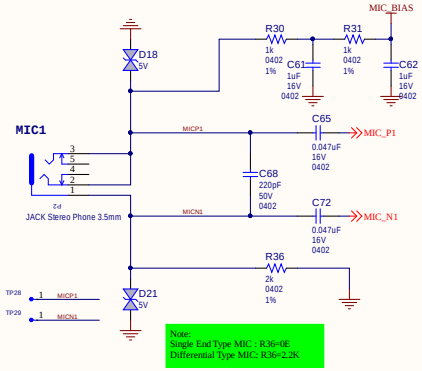

Note:
Single End Type MIC : R36=0E
Differential Type MIC: R36=2.2K

DIG MICROPHONE with PDM OUTPUT

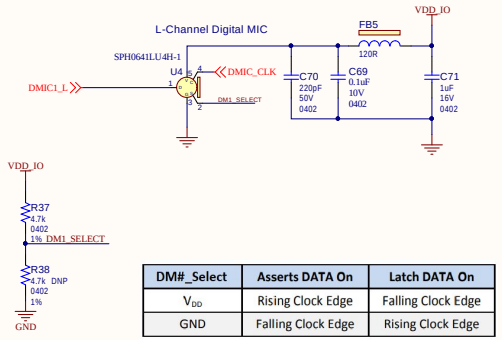

DM#_Select	Asserts DATA On	Latch DATA On
V_{DD}	Rising Clock Edge	Falling Clock Edge
GND	Falling Clock Edge	Rising Clock Edge

NOTE:
1). Either DIG MIC or ANA MIC is functional, not both
2). DIG MIC is the default configuration in the FW
3). BM83 supports 2 DIG MIC (L&R) but only 1 DIG MIC is supported in the current FW

Drawn By: Chetan Bohra	MICROCHIP
Engineer: Chetan Bohra	
PartNumber:	Project Title: *BM83 Reference Circuit for Embedded Mode*
Sheet Title: Audio Interface	Designed with Altium
Size C / Sch #:03- / Revision:0.9	Date: 2019/12/23 下午 05:12:26 / Sheet 4 of 4
File: 04 EXTERNAL CODEC INTERFACE.SchDoc	Altium.com