PESD5V0S1BA

Bidirectional ESD protection diode

26 April 2024 Product data sheet

1. General description

Bidirectional ElectroStatic Discharge (ESD) protection diode in very small SOD323 (SC-76) Surface-Mounted Device (SMD) plastic package designed to protect one signal line from the damage caused by ESD and other transients.

2. Features and benefits

- Bidirectional ESD protection of one line
- Max. peak pulse power: P_{PPM} = 130 W
- Low clamping voltage: $V_{(CL)R}$ = 14 V
- Low leakage current: I_{RM} = 5 nA
- ESD protection > 30 kV
- IEC 61000-4-2, level 4 (ESD)
- IEC 61000-4-5 (surge); I_{PPM} = 12 A
- Very small SMD plastic package

3. Applications

- Cellular handsets and accessories
- Portable electronics
- Computers and peripherals
- Communication systems
- Audio and video equipment

4. Quick reference data

Table 1. Quick reference data

Symbol	Parameter	Conditions		Min	Typ	Max	Unit
V_{RWM}	reverse standoff voltage	T_{amb} = 25 °C		-	-	5	V
C_d	diode capacitance	f = 1 MHz; V_R = 0 V; T_{amb} = 25 °C		-	35	45	pF

nexperia

5. Pinning information

Table 2. Pinning information

Pin	Symbol	Description	Simplified outline	Graphic symbol
1	K1	cathode (diode 1)	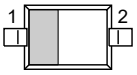 SOD323	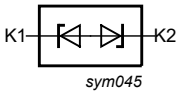
2	K2	cathode (diode 2)		

6. Ordering information

Table 3. Ordering information

Type number	Package		
	Name	Description	Version
PESD5V0S1BA	SOD323	plastic, surface-mounted package; 2 leads; 1.3 mm pitch; 1.7 mm x 1.25 mm x 0.95 mm body	SOD323

7. Marking

Table 4. Marking codes

Type number	Marking code
PESD5V0S1BA	E6

All information provided in this document is subject to legal disclaimers.

© Nexperia B.V. 2024. All rights reserved

8. Limiting values

Table 5. Limiting values

In accordance with the Absolute Maximum Rating System (IEC 60134).

Symbol	Parameter	Conditions		Min	Max	Unit
Per diode						
P_{PPM}	rated peak pulse power	t_p = 8/20 µs	[1] [2]	-	130	W
I_{PPM}	rated peak pulse current		[1] [2]	-	12	A
T_j	junction temperature			-	150	°C
T_{amb}	ambient temperature			-55	150	°C
T_{stg}	storage temperature			-65	150	°C
ESD maximum ratings						
V_{ESD}	electrostatic discharge voltage	IEC 61000-4-2 (contact discharge)	[2] [3]	-	30	kV
		HBM MIL-Std 883		-	10	kV

[1] Non-repetitive current pulse 8/20 µs exponentially decaying waveform according to IEC 61000-4-5
[2] Measured from pin 1 to pin 2.
[3] Device stressed with ten non-repetitive ElectroStatic Discharge (ESD) pulses

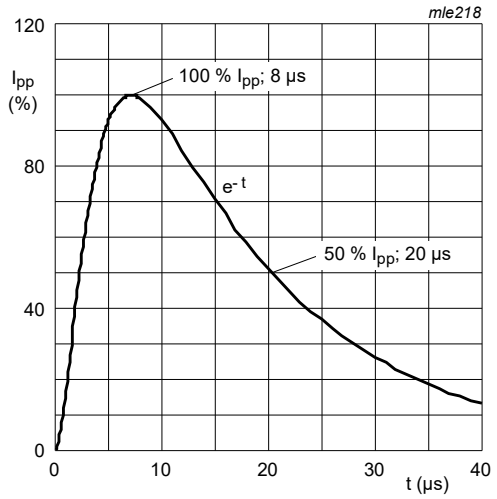

Fig. 1. 8/20 µs pulse waveform according to IEC 61000-4-5

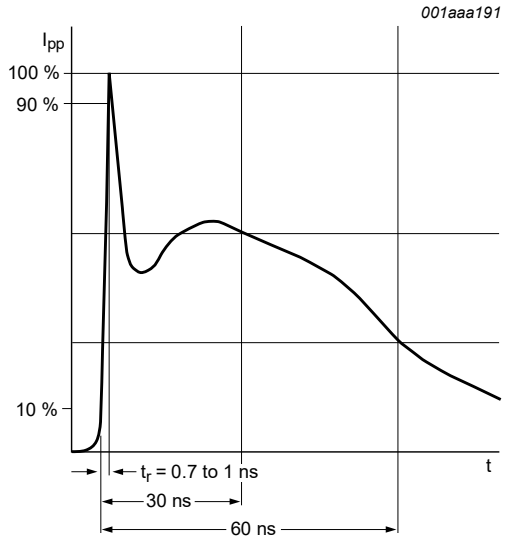

Fig. 2. ESD pulse waveform according to IEC 61000-4-2

All information provided in this document is subject to legal disclaimers.

© Nexperia B.V. 2024. All rights reserved

9. Characteristics

Table 6. Characteristics

Symbol	Parameter	Conditions		Min	Typ	Max	Unit
V_{RWM}	reverse standoff voltage	T_{amb} = 25 °C		-	-	5	V
V_{BR}	breakdown voltage	I_R = 1 mA; T_{amb} = 25 °C		5.5	-	9.5	V
I_{RM}	reverse leakage current	V_{RWM} = 5 V; T_{amb} = 25 °C		-	5	100	nA
C_d	diode capacitance	f = 1 MHz; V_R = 0 V; T_{amb} = 25 °C		-	35	45	pF
V_{CL}	clamping voltage	I_{PP} = 1 A; T_{amb} = 25 °C	[1] [2]	-	-	10	V
		I_{PPM} = 12 A; T_{amb} = 25 °C	[1] [2]	-	-	14	V
R_{diff}	differential resistance	I_R = 1 mA; T_{amb} = 25 °C		-	-	50	Ω

[1] Non-repetitive current pulse 8/20 µs exponentially decaying waveform according to IEC61000-4-5.
[2] Measures from pin 1 to pin 2.

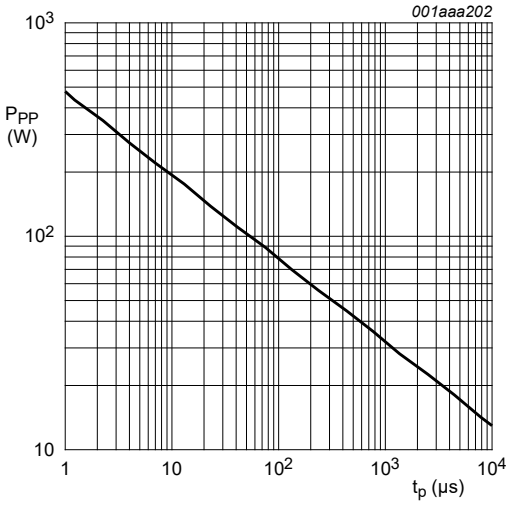

T_{amb} = 25 °C

Fig. 3. Peak pulse power as a function of exponential pulse duration; typical values

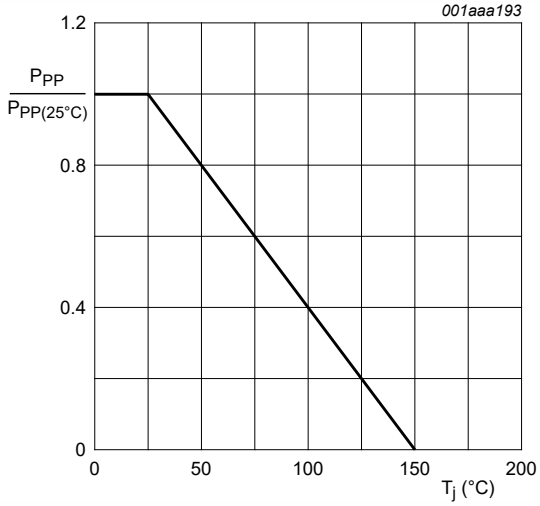

Fig. 4. Relative variation of peak pulse power as a function of junction temperature; typical values

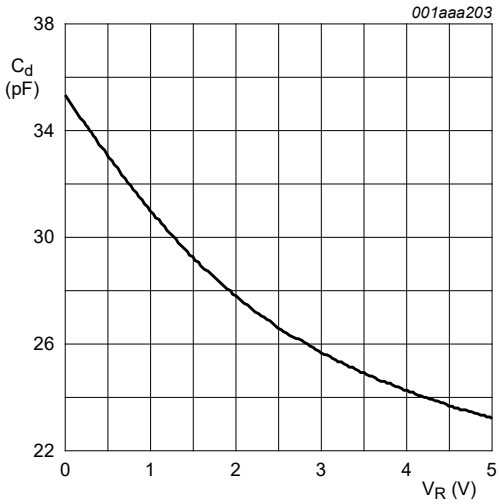

f = 1 MHz; T_{amb} = 25 °C

Fig. 5. Diode capacitance as a function of reverse voltage; typcial values

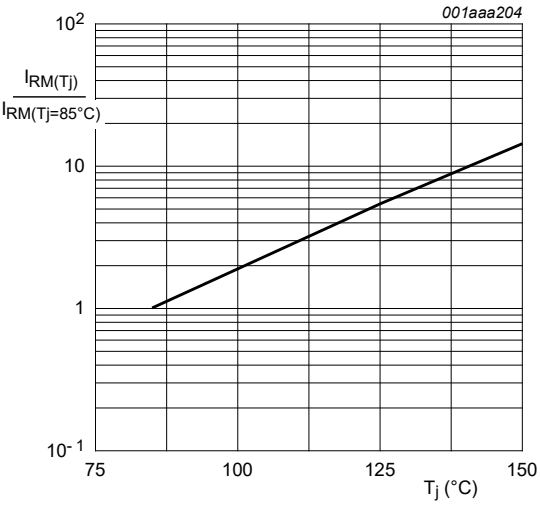

Fig. 6. Relative variation of reverse leakage current as a function of junction temperature; typical values

All information provided in this document is subject to legal disclaimers.

© Nexperia B.V. 2024. All rights reserved

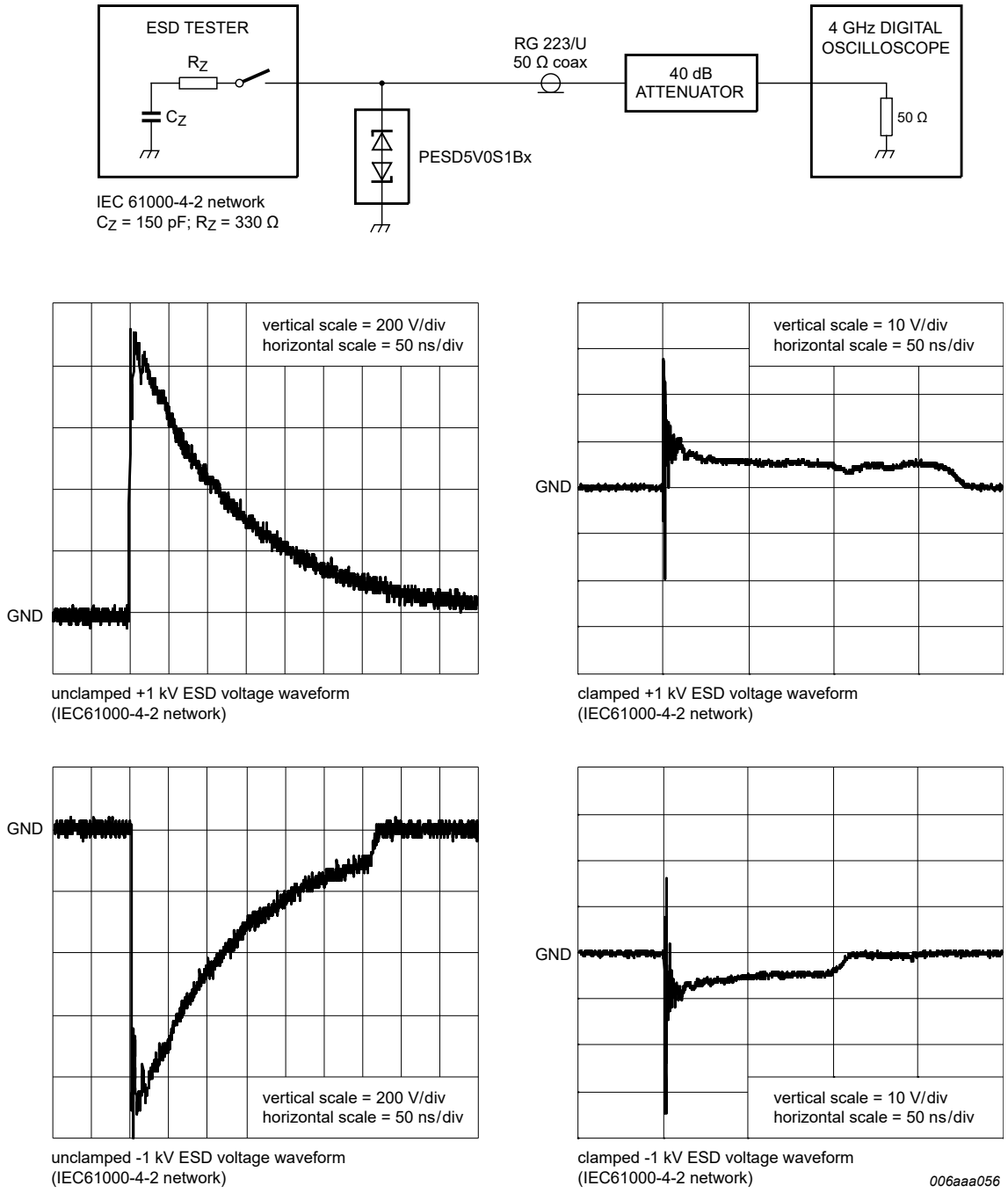

Fig. 7. ESD clamping test setup and waveforms

All information provided in this document is subject to legal disclaimers.

© Nexperia B.V. 2024. All rights reserved

10. Application information

The device is designed for the protection of one bidirectional data line from surge pulses and ESD damage. The device is suitable on lines where the signal polarities are both positive and negative with respect to ground.

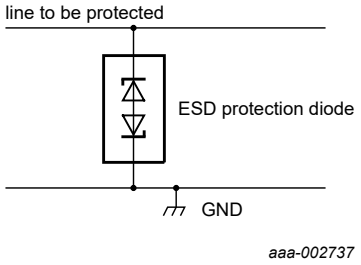

Fig. 8. Application diagram

Circuit board layout and protection device placement

Circuit board layout is critical for the suppression of ESD, Electrical Fast Transient (EFT) and surge transients. The following guidelines are recommended:

1. Place the device as close to the input terminal or connector as possible.
2. Minimize the path length between the device and the protected line.
3. Keep parallel signal paths to a minimum.
4. Avoid running protected conductors in parallel with unprotected conductors.
5. Minimize all Printed-Circuit Board (PCB) conductive loops including power and ground loops.
6. Minimize the length of the transient return path to ground.
7. Avoid using shared transient return paths to a common ground point.
8. Use ground planes whenever possible. For multilayer PCBs, use ground vias.

All information provided in this document is subject to legal disclaimers.

© Nexperia B.V. 2024. All rights reserved

11. Package outline

Plastic surface-mounted package; 2 leads **SOD323**

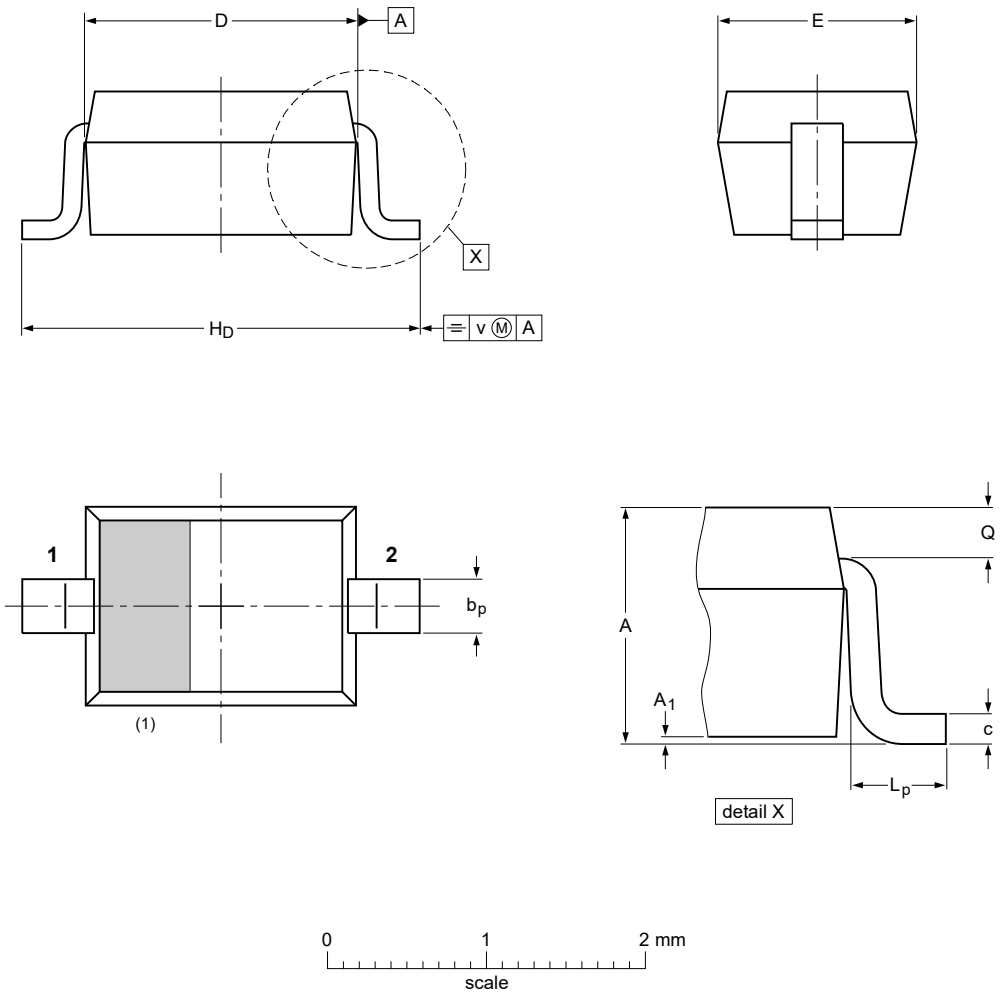

DIMENSIONS (mm are the original dimensions)

UNIT	A	A_1 max	b_p	c	D	E	H_D	L_p	Q	v
mm	1.1 0.8	0.05	0.40 0.25	0.25 0.10	1.8 1.6	1.35 1.15	2.7 2.3	0.45 0.15	0.25 0.15	0.2

Note

1. The marking bar indicates the cathode

OUTLINE VERSION	REFERENCES				EUROPEAN PROJECTION	ISSUE DATE
	IEC	JEDEC	JEITA			
SOD323			SC-76			~~03-12-17~~ 06-03-16

Fig. 9. Package outline SOD323

All information provided in this document is subject to legal disclaimers.

© Nexperia B.V. 2024. All rights reserved

12. Soldering

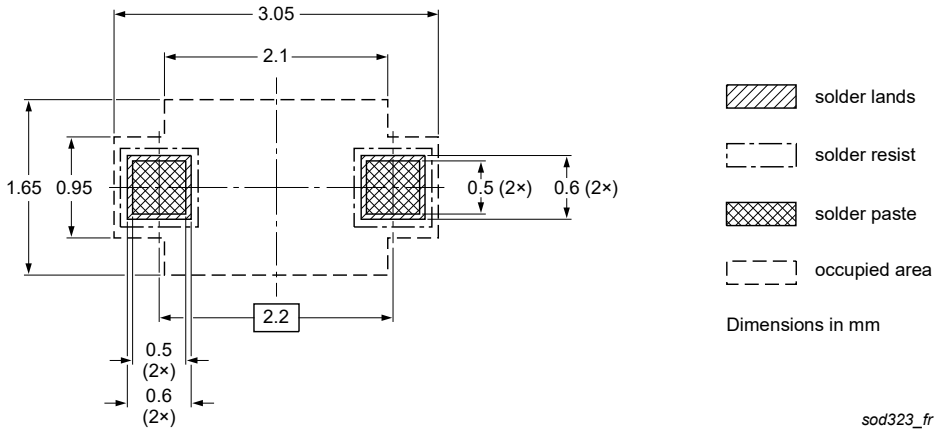

Fig. 10. Reflow soldering footprint for SOD323

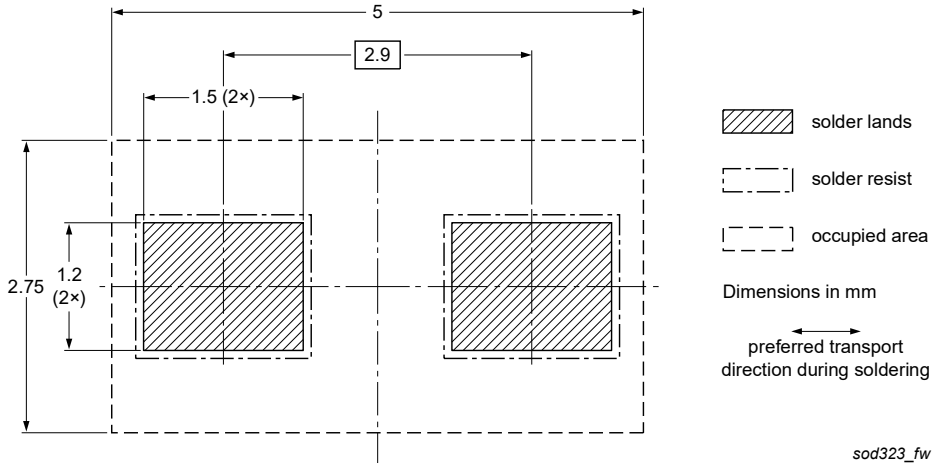

Fig. 11. Wave soldering footprint for SOD323

All information provided in this document is subject to legal disclaimers.

© Nexperia B.V. 2024. All rights reserved

13. Revision history

Table 7. Revision history

Data sheet ID	Release date	Data sheet status	Change notice	Supersedes
PESD5V0S1BA v.6	20240426	Product data sheet	-	PESD5V0S1BA v.5
Modifications:	• Product changed to non-automotive qualification. Please refer to nexperia.com for automotive (-Q) product alternative(s).			
PESD5V0S1BA v.5	20180823	Product data sheet	-	PESD5V0S1BA _BB_BL_4
PESD5V0S1BA _BB_BL_4	20090820	Product data sheet	-	PESD5V0S1BA _BB_BL_3
PESD5V0S1BA _BB_BL_3	20041217	Product data sheet	-	PESD5V0S1BA _BB_BL_2
PESD5V0S1BA _BB_BL_2	20040322	Product specification	-	PESD5V0S1BA _BB_BL_1
PESD5V0S1BA _BB_BL_1	20040304	Product specification	-	-

All information provided in this document is subject to legal disclaimers.

© Nexperia B.V. 2024. All rights reserved

14. Legal information

Data sheet status

Document status [1][2]	Product status [3]	Definition
Objective [short] data sheet	Development	This document contains data from the objective specification for product development.
Preliminary [short] data sheet	Qualification	This document contains data from the preliminary specification.
Product [short] data sheet	Production	This document contains the product specification.

[1] Please consult the most recently issued document before initiating or completing a design.
[2] The term 'short data sheet' is explained in section "Definitions".
[3] The product status of device(s) described in this document may have changed since this document was published and may differ in case of multiple devices. The latest product status information is available on the internet at https://www.nexperia.com.

Definitions

Draft — The document is a draft version only. The content is still under internal review and subject to formal approval, which may result in modifications or additions. Nexperia does not give any representations or warranties as to the accuracy or completeness of information included herein and shall have no liability for the consequences of use of such information.

Short data sheet — A short data sheet is an extract from a full data sheet with the same product type number(s) and title. A short data sheet is intended for quick reference only and should not be relied upon to contain detailed and full information. For detailed and full information see the relevant full data sheet, which is available on request via the local Nexperia sales office. In case of any inconsistency or conflict with the short data sheet, the full data sheet shall prevail.

Product specification — The information and data provided in a Product data sheet shall define the specification of the product as agreed between Nexperia and its customer, unless Nexperia and customer have explicitly agreed otherwise in writing. In no event however, shall an agreement be valid in which the Nexperia product is deemed to offer functions and qualities beyond those described in the Product data sheet.

Disclaimers

Limited warranty and liability — Information in this document is believed to be accurate and reliable. However, Nexperia does not give any representations or warranties, expressed or implied, as to the accuracy or completeness of such information and shall have no liability for the consequences of use of such information. Nexperia takes no responsibility for the content in this document if provided by an information source outside of Nexperia.

In no event shall Nexperia be liable for any indirect, incidental, punitive, special or consequential damages (including - without limitation - lost profits, lost savings, business interruption, costs related to the removal or replacement of any products or rework charges) whether or not such damages are based on tort (including negligence), warranty, breach of contract or any other legal theory.

Notwithstanding any damages that customer might incur for any reason whatsoever, Nexperia's aggregate and cumulative liability towards customer for the products described herein shall be limited in accordance with the Terms and conditions of commercial sale of Nexperia.

Right to make changes — Nexperia reserves the right to make changes to information published in this document, including without limitation specifications and product descriptions, at any time and without notice. This document supersedes and replaces all information supplied prior to the publication hereof.

Suitability for use — Nexperia products are not designed, authorized or warranted to be suitable for use in life support, life-critical or safety-critical systems or equipment, nor in applications where failure or malfunction of an Nexperia product can reasonably be expected to result in personal injury, death or severe property or environmental damage. Nexperia and its suppliers accept no liability for inclusion and/or use of Nexperia products in such equipment or applications and therefore such inclusion and/or use is at the customer's own risk.

Quick reference data — The Quick reference data is an extract of the product data given in the Limiting values and Characteristics sections of this document, and as such is not complete, exhaustive or legally binding.

Applications — Applications that are described herein for any of these products are for illustrative purposes only. Nexperia makes no representation or warranty that such applications will be suitable for the specified use without further testing or modification.

Customers are responsible for the design and operation of their applications and products using Nexperia products, and Nexperia accepts no liability for any assistance with applications or customer product design. It is customer's sole responsibility to determine whether the Nexperia product is suitable and fit for the customer's applications and products planned, as well as for the planned application and use of customer's third party customer(s). Customers should provide appropriate design and operating safeguards to minimize the risks associated with their applications and products.

Nexperia does not accept any liability related to any default, damage, costs or problem which is based on any weakness or default in the customer's applications or products, or the application or use by customer's third party customer(s). Customer is responsible for doing all necessary testing for the customer's applications and products using Nexperia products in order to avoid a default of the applications and the products or of the application or use by customer's third party customer(s). Nexperia does not accept any liability in this respect.

Limiting values — Stress above one or more limiting values (as defined in the Absolute Maximum Ratings System of IEC 60134) will cause permanent damage to the device. Limiting values are stress ratings only and (proper) operation of the device at these or any other conditions above those given in the Recommended operating conditions section (if present) or the Characteristics sections of this document is not warranted. Constant or repeated exposure to limiting values will permanently and irreversibly affect the quality and reliability of the device.

Terms and conditions of commercial sale — Nexperia products are sold subject to the general terms and conditions of commercial sale, as published at http://www.nexperia.com/profile/terms, unless otherwise agreed in a valid written individual agreement. In case an individual agreement is concluded only the terms and conditions of the respective agreement shall apply. Nexperia hereby expressly objects to applying the customer's general terms and conditions with regard to the purchase of Nexperia products by customer.

No offer to sell or license — Nothing in this document may be interpreted or construed as an offer to sell products that is open for acceptance or the grant, conveyance or implication of any license under any copyrights, patents or other industrial or intellectual property rights.

Export control — This document as well as the item(s) described herein may be subject to export control regulations. Export might require a prior authorization from competent authorities.

Non-automotive qualified products — Unless this data sheet expressly states that this specific Nexperia product is automotive qualified, the product is not suitable for automotive use. It is neither qualified nor tested in accordance with automotive testing or application requirements. Nexperia accepts no liability for inclusion and/or use of non-automotive qualified products in automotive equipment or applications.

In the event that customer uses the product for design-in and use in automotive applications to automotive specifications and standards, customer (a) shall use the product without Nexperia's warranty of the product for such automotive applications, use and specifications, and (b) whenever customer uses the product for automotive applications beyond Nexperia's specifications such use shall be solely at customer's own risk, and (c) customer fully indemnifies Nexperia for any liability, damages or failed product claims resulting from customer design and use of the product for automotive applications beyond Nexperia's standard warranty and Nexperia's product specifications.

Translations — A non-English (translated) version of a document is for reference only. The English version shall prevail in case of any discrepancy between the translated and English versions.

Trademarks

Notice: All referenced brands, product names, service names and trademarks are the property of their respective owners.

All information provided in this document is subject to legal disclaimers.

© Nexperia B.V. 2024. All rights reserved

Contents

1. General description....1
2. Features and benefits....1
3. Applications....1
4. Quick reference data....1
5. Pinning information....2
6. Ordering information....2
7. Marking....2
8. Limiting values....3
9. Characteristics....4
10. Application information....6
11. Package outline....7
12. Soldering....8
13. Revision history....9
14. Legal information....10

© Nexperia B.V. 2024. All rights reserved

For more information, please visit: http://www.nexperia.com
For sales office addresses, please send an email to: salesaddresses@nexperia.com
Date of release: 26 April 2024