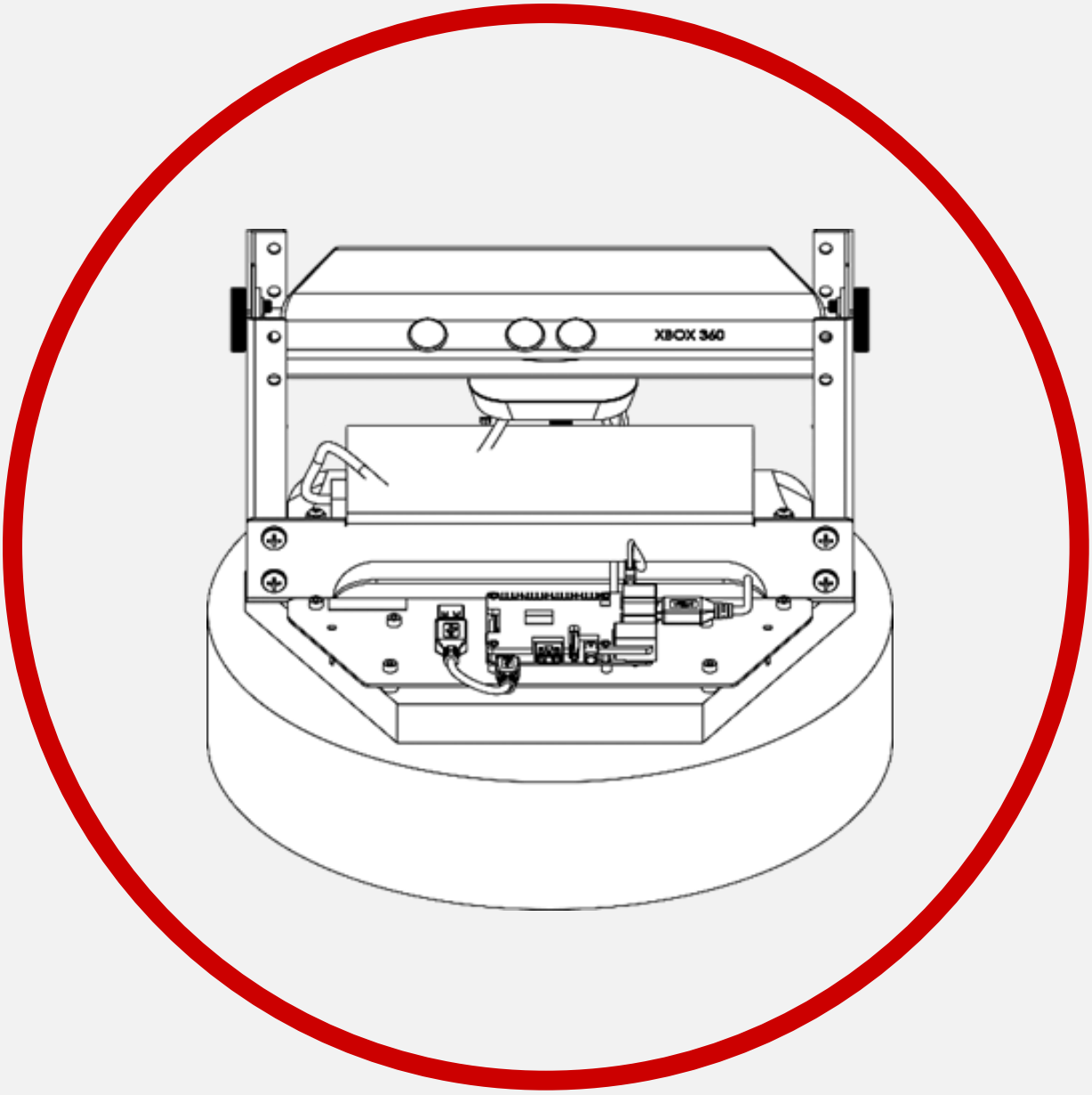

Autonomous Vehicles Research Studio

Setup Guide – QBot 2/2e Batteries

v 2.0 – 18*th April* 2023

Table of Contents

A. Charging the QBot 2/2e Batteries 2

A. Charging the QBot 2/2e Batteries

1. Connect the power supply (Figure 1a) to a wall outlet and the barrel to the QBot 2/2e's charging port (Figure 1b).
2. Turn on the QBot 2/2e using the power switch next to the charging port (Figure 1b). The Status LED should be green and flashing (Figure 1c). This indicates that the QBot 2/2e is charging.

Note: The QBot 2/2e does not need to be turned on for charging. Charging will begin as soon as power supply is connected

3. When the QBot 2/2e is fully charged the status LED will remain a solid green color. Disconnect the power supply from the QBot 2/2e.

a. The QBot 2/2e Charger

b. The QBot 2/2e charger input

c. Battery Status LED

d. The QBot 2/2e Battery compartment

Figure 1: The QBot 2/2e battery and charger input

Note: If the QBot 2/2e battery ever needs replacing, it can be accessed from a compartment between the wheels (Figure 1d)

© Quanser Inc., All rights reserved.

QUANSER
INNOVATE · EDUCATE

Solutions for teaching and research. Made in Canada.