Quick Start Guide: QArm

STEP 1 Check Components and Details

Make sure your QArm experiment includes the following components:

1. QArm manipulator with QFLEX USB interface panel
2. 12VDC 16A Power Supply
3. USB-B to USB-A 2.0 QArm interface cable
4. USB-C to USB-A 3.0 camera interface cable

STEP 2 Install and Test QUARC

Refer to the QUARC Quick Installation Guide document using the link provided in the QUARC delivery email that you received. Note that MATLAB® and Simulink® (with MATLAB Coder™ and Simulink Coder™) must be installed prior to installing QUARC.

STEP 3 Set Up the Hardware

The steps below outline the instructions to setup the QArm with a QFLEX 2 USB panel.

A

Place the QArm on a flat surface and ensure that a cylindrical space of 1m radius and height is around it so that all the joints can rotate freely

B

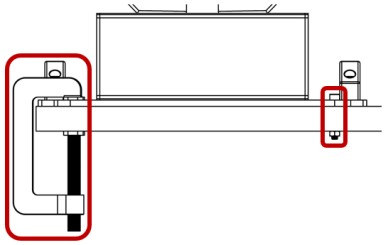

Firmly secure the QArm to the work surface using bolts or clamps via the base plate.

C

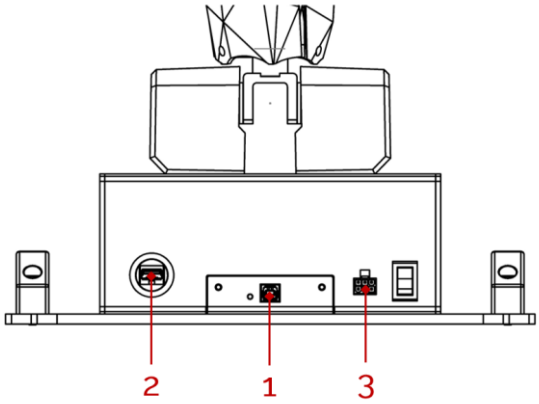

1. Connect the QArm to your workstation using the provided USB-B to USB-A cable.
2. Optionally, connect the QArm's camera to the workstation using the provided USB-C to USB-A cable.
3. Connect the provided power supply to the power port of the QArm.

D

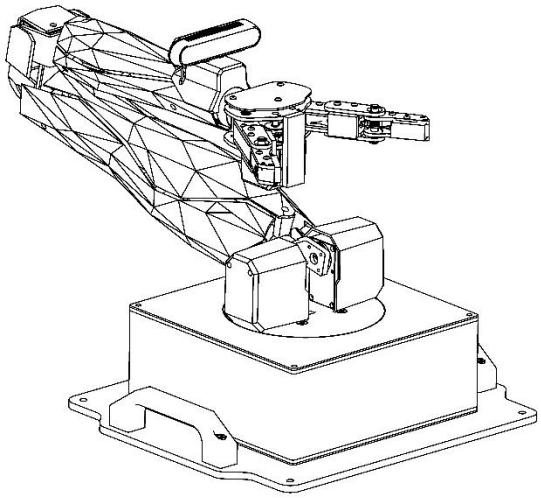

Rest Configuration

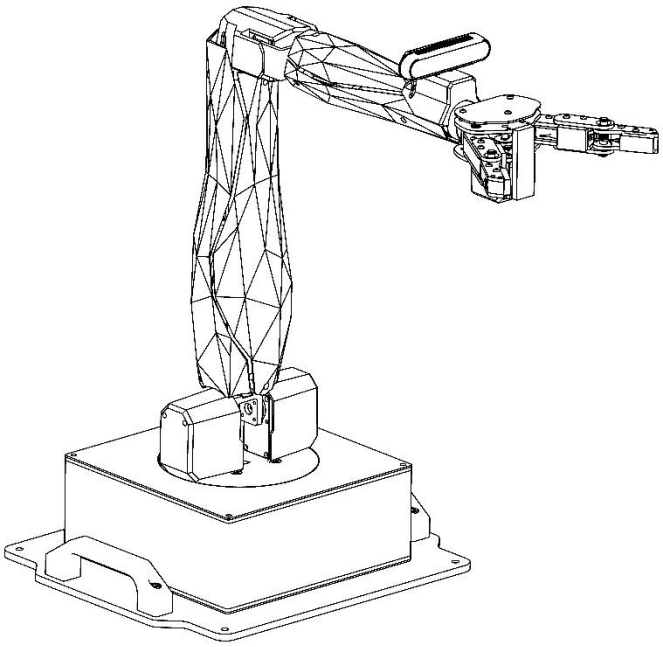

Home Configuration

1. Ensure that the power switch is OFF.
2. Move the QArm from the Rest Configuration to the Home Configuration shown.
3. While supporting the QArm, turn ON the power switch.
4. The manipulator will hold its position and can be let go at this point.

E

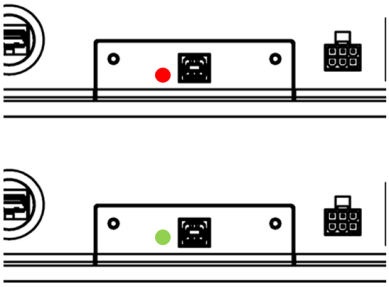

The USB LED next to the USB B connector in the base being green indicates that the USB connection has been established. If this LED is lit red, a USB connection is not established. Repeat step D in the Home Configuration again.

STEP 4 Testing the QArm

Follow the procedure below to test your QArm.

A

Download the Simulink courseware and the user manuals from https://www.quanser.com/products/qarm/. Launch MATLAB and navigate to the Quick Start Guide folder inside the Technical Resources.

B

Open the **qarm_quick_start.slx** file.

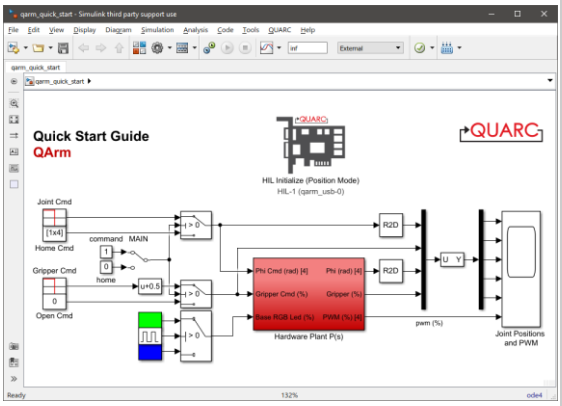

C

Build, connect and run the model. The LED strip around the base of the QArm should alternate between blue and green every second.

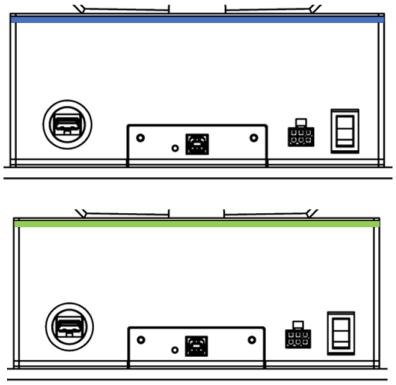

D

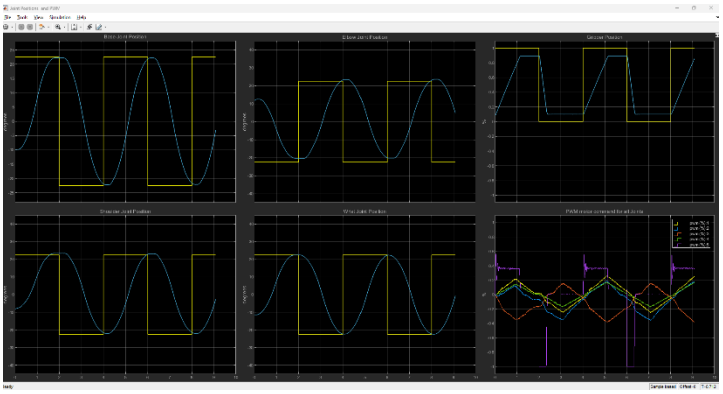

Switch the MAIN Manual Switch. The **Joint Positions and PWM** scope should display the commanded (yellow) vs measured (blue) positions for the base, shoulder, elbow and wrist joints and gripper, as well as the low level PWM motor commands (multiple colors). Stop the model. The QArm should hold its last position.

E

While supporting the QArm manipulator by hand, turn OFF the power. The manipulator should now be gently moved to the Rest Configuration from step 3D for storage.

TROUBLESHOOTING

Review the following recommendations before contacting Quanser's technical support engineers.

Check the connections outlined in Step 3 of this guide and ensure that the cables are connected firmly.

QArm does not hold position on boot up.	Ensure that the power connector is connected firmly. Turn the power OFF, and then back ON after 10 seconds. If the manipulator continues to exhibit the behavior, contact tech@quanser.com.
STILL NEED HELP?	For further assistance from a Quanser engineer, contact us at tech@quanser.com or call +1-905-940-3575.

LEARN MORE

To browse and download the latest Quanser QArm resources, visit www.quanser.com/courseware

©2022 Quanser Inc. All rights reserved. MATLAB® is a registered trademark of the MathWorks®.