Quick Start Guide: QArm Mini

STEP 1 Check Components and Details

Make sure you have the following items ready before you begin:

Ensure your QArm Mini Manipulator includes the following components

1. QArm Mini
2. Base Plate
3. 24V 2.71A Power Supply
4. USB-A to USB-C 3.0 QArm Mini interface cable

Ensure you local computer has the following components

1. Windows 10/11 operating system
2. MATLAB® 2024a or later installed w/ MATLAB® Coder & Simulink® Coder
3. QUARC 2024 SP1 or later installed

STEP 2 Setup the Hardware

The steps below outline the instructions to setup the QBot Platform for testing:

A

Firmly secure the QArm Mini to the base plate by tightening the thumb screws.

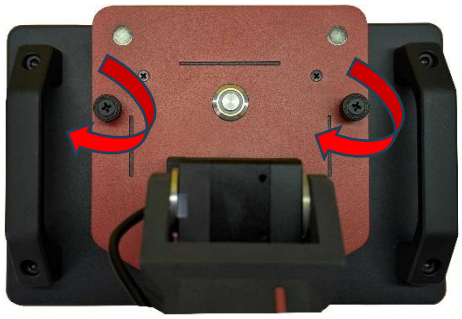

B

Place the QArm Mini on a flat surface and ensure that a cylindrical space of 0.5m radius and height is around it so that all the joints can rotate freely.

C

1. Connect the provided power supply to the power port of the QArm Mini.
2. Connect the QArm Mini to your workstation using the provided USB-A to USB-C cable.
3. Click the power switch to turn ON the QArm Mini (only after #1 and #2 are connected).

D

Rest Configuration

Home Configuration

1. Ensure that the power switch is OFF.
2. Move the QArm Mini to Rest Configuration.
3. Turn ON the power switch.
4. The LED around the power switch should glow RED.

STEP 3 Running an example

The steps below outline the instructions to run the Quick Start Example for MATLAB®/Simulink®:

A

Check and update the latency setting:

i. Navigate to Device Manager > Ports

ii. Select the appropriate device **USB Serial Port (COMx)**. Make a note of the COM port Number.

iii. Right-click the correct **USB Serial Port (COMx)** and go to Port Settings > Advance.

iv. Under the **Latency Timer (msec)** section, set the latency to 2 ms.

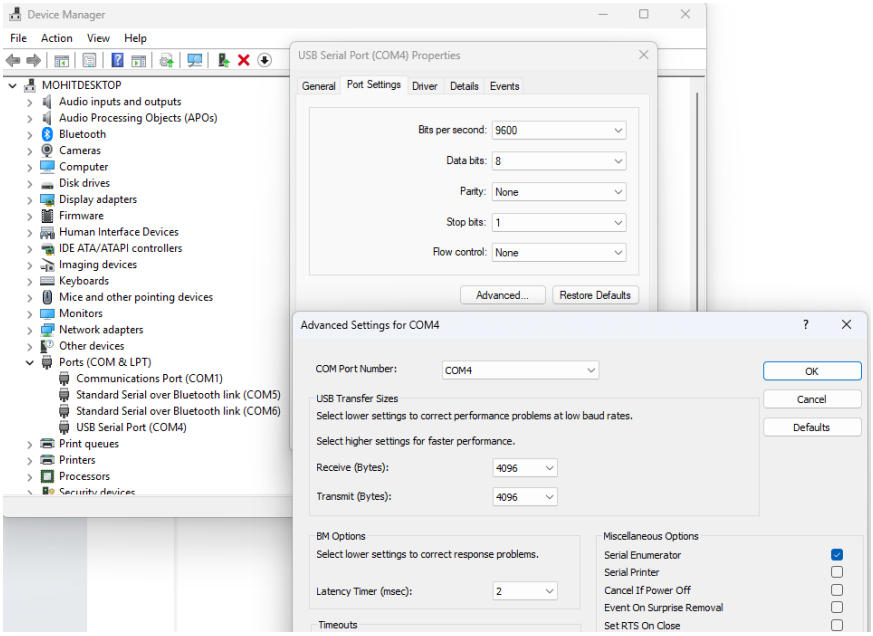

B

1. Launch MATLAB.
2. Navigate to the 2_quick_start_guides directory inside the Quanser folder.
3. Open the qarm_mini_quick_start.slx Simulink model.

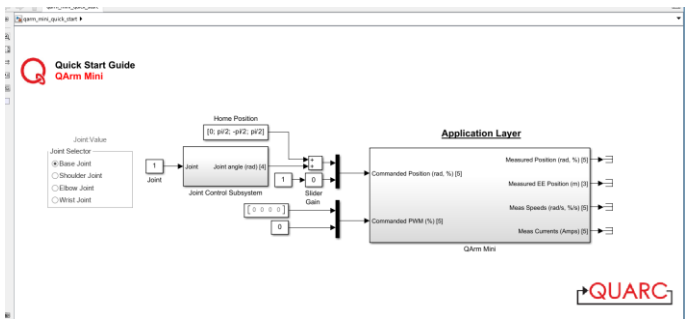

C

1. From the root level's Application Layer, double-click QArm Mini subsystem to navigate to the Interface Layer, and then the Hardware Layer, and double-click on the HIL Initialize block.
2. Update the Board Identifier value to match the COM port you noted during setup (step 3A).

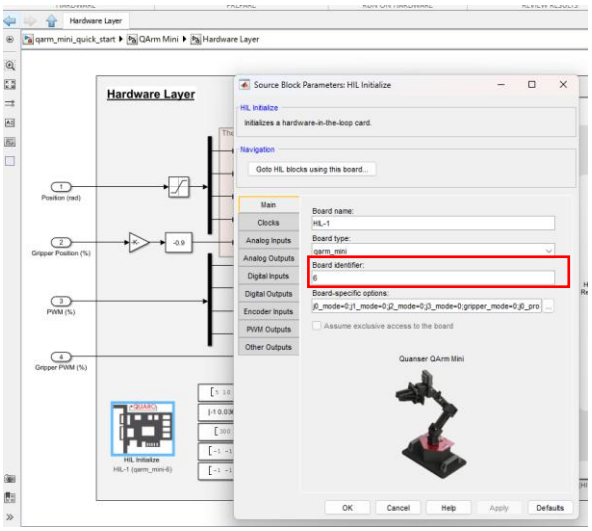

D

1. Go back to the root level of your model (Application Layer). Build and deploy the model using the Monitor and Tune button on the Hardware or QUARC tab.
2. The manipulator starts in the home position. You can control each joint individually by selecting from the Joint Selector and using the up and down arrow keys on your keyboard.
3. You can press spacebar at anytime to return the arm to the home position.

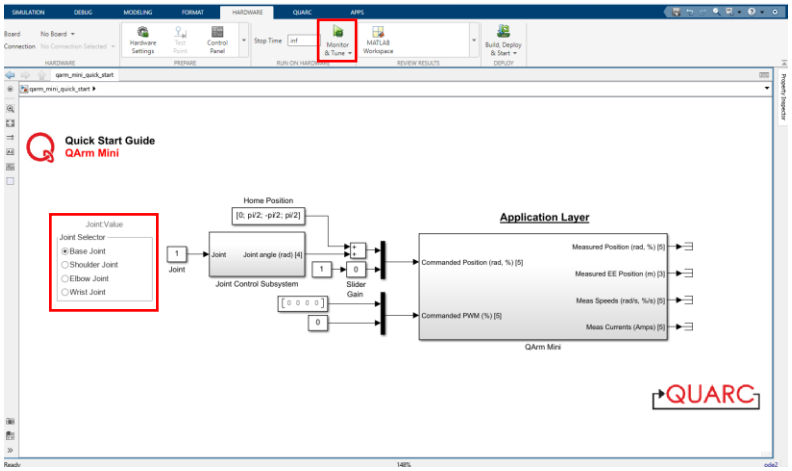

E

Stop the model. While supporting the QArm Mini manipulator by hand, turn OFF the power switch. The manipulator should now be gently moved to the Rest Configuration.

TROUBLESHOOTING

Common issues and possible solutions

QArm Mini Power switch LED does not light up	Ensure that the power connector is connected firmly. Ensure that the USB-A to USB-C cable is connected to the manipulator and your workstation properly.

LEARN MORE

To browse and download the latest Quanser resources visit www.quanser.com/courseware or call +1-905-940-3575

STILL NEED HELP

For further assistance from a Quanser engineer, contact us at tech@quanser.com

©2022 Quanser Inc. All rights reserved. MATLAB® is a registered trademark of the MathWorks®