QUANSER
INNOVATE · EDUCATE

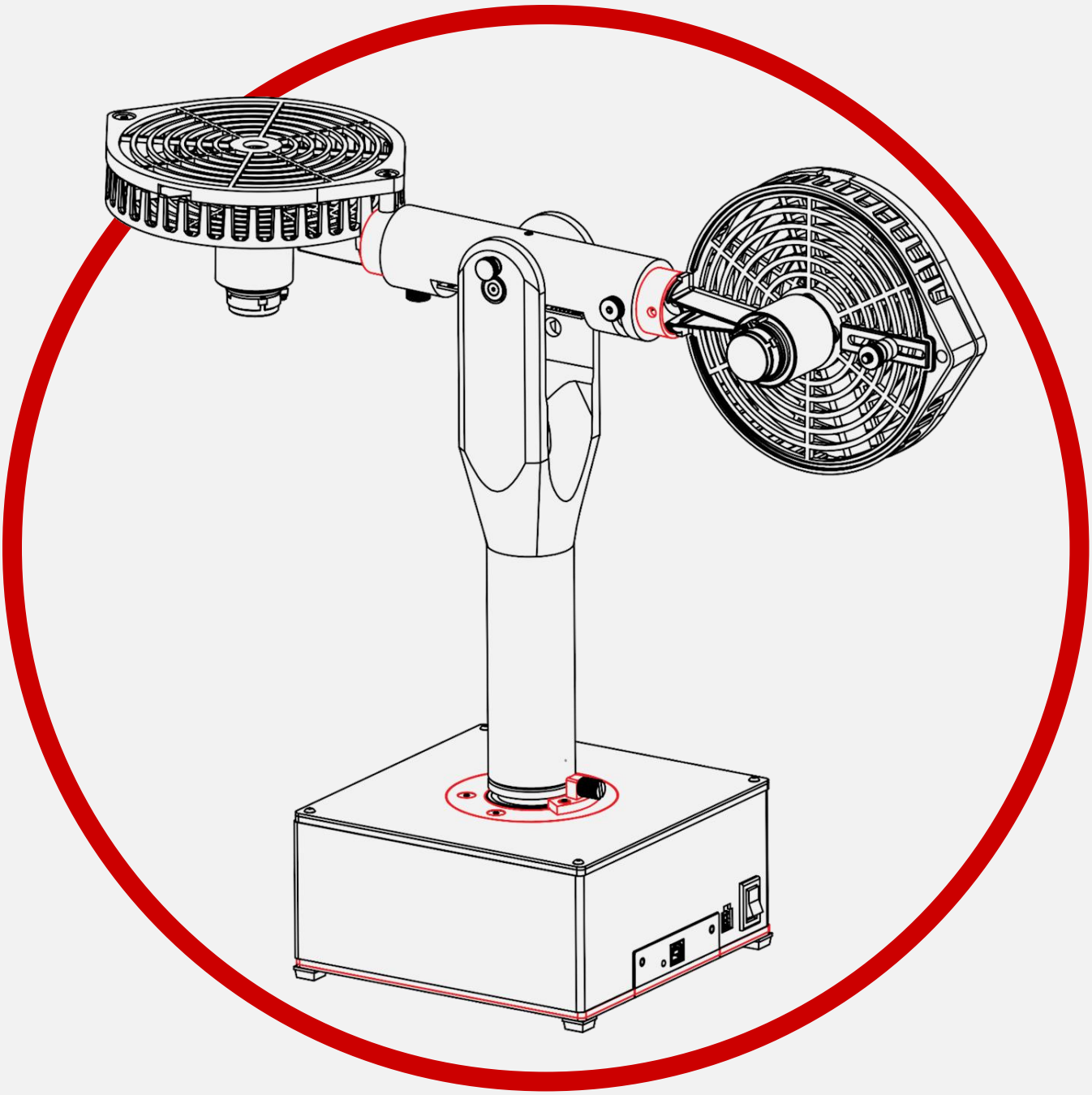

Aero 2

User Manual

Setup and Configuration

V3 – 17th March 2024

© 2024 Quanser Consulting Inc., All rights reserved.

For more information on the solutions Quanser offers,
please visit the web site at: http://www.quanser.com

Quanser Consulting Inc.
119 Spy Court
Markham, Ontario
L3R 5H6, Canada

info@quanser.com
Phone : 19059403575
Fax : 19059403576
printed in Markham, Ontario.

This document and the software described in it are provided subject to a license agreement. Neither the software nor this document may be used or copied except as specified under the terms of that license agreement. Quanser Consulting Inc. ("Quanser") grants the following rights: a) The right to reproduce the work, to incorporate the work into one or more collections, and to reproduce the work as incorporated in the collections, b) to create and reproduce adaptations provided reasonable steps are taken to clearly identify the changes that were made to the original work, c) to distribute and publicly perform the work including as incorporated in collections, and d) to distribute and publicly perform adaptations. The above rights may be exercised in all media and formats whether now known or hereafter devised. These rights are granted subject to and limited by the following restrictions: a) You may not exercise any of the rights granted to You in above in any manner that is primarily intended for or directed toward commercial advantage or private monetary compensation, and b) You must keep intact all copyright notices for the Work and provide the name Quanser for attribution. These restrictions may not be waved without express prior written permission of Quanser.

Caution

This equipment is designed to be used for educational and research purposes and is not intended for use by the public. The user is responsible for ensuring that the equipment will be used by technically qualified personnel only. Users are responsible for certifying any modifications or additions they make to the default configuration.

FCC Notice This device complies with Part 15 of the FCC rules. Operation is subject to the following two conditions: (1) this device may not cause harmful interference, and (2) this device must accept any interference received, including interference that may cause undesired operation.
Note: This equipment has been tested and found to comply with the limits for a Class A digital device, pursuant to part 15 of the FCC Rules. These limits are designed to provide reasonable protection against harmful interference when the equipment is operated in a commercial environment.

Industry Canada Notice This Class A digital apparatus complies with CAN ICES-3 (A). Cet appareil numérique de la classe A est conforme à la norme NMB-3 (A) du Canada.

Waste Electrical and Electronic Equipment (WEEE)
This symbol indicates that waste products must be disposed of separately from municipal household waste, according to Directive 2012/19/EU of the European Parliament and the Council on waste electrical and electronic equipment (WEEE). All products at the end of their life cycle must be sent to a WEEE collection and recycling center. Proper WEEE disposal reduces the environmental impact and the risk to human health due to potentially hazardous substances used in such equipment. Your cooperation in proper WEEE disposal will contribute to the effective usage of natural resources.

CE Compliance

This product meets the essential requirements of applicable European Directives as follows:

- 2006/95/EC; Low-Voltage Directive (safety)
- 2004/108/EC; Electromagnetic Compatibility Directive (EMC)

Warning: This is a Class A product. In a domestic environment this product may cause radio interference, in which case the user may be required to take adequate measures.

Table of Contents

Table of Contents 2

Presentation 3

Configuration 5

System Schematic 5

Handling and Setup 6

Hardware Components 7

i. DC Motors 7

ii. Propellers 7

iii. Encoders 7

iv. Inertial Measurement Unit (IMU) 7

v. Power Supply 8

Specifications 8

Balancing 9

Environmental 9

Electrical Considerations 10

Presentation

The Quanser Aero 2, pictured in Figure 1, is a compact dual-rotor two degree-of-freedom aerospace system that can be used to perform a variety of mechatronic and flight-control-based experiments. The Quanser Aero 2 can be equipped with either the QFLEX 2 USB or QFLEX 2 Embedded interface modules. The QFLEX 2 USB allows control by a computer via USB connection. The QFLEX 2 Embedded allows for control by a microcontroller device such as an Arduino via a 4-wire SPI interface.

For all versions, the system is driven using two direct drive 18V brushed DC motors. The motors are powered by a built-in PWM amplifier with integrated current sense. Rotary encoders are used to measure the angular position of the Aero 2 in both degrees of freedom, as well as the position of the thruster motors. The velocity of these encoders can be measured using the included software tachometers.

Important components of the Quanser Aero 2 are listed in Table 1 and shown in Figure 2.

Figure 1. Quanser Aero 2

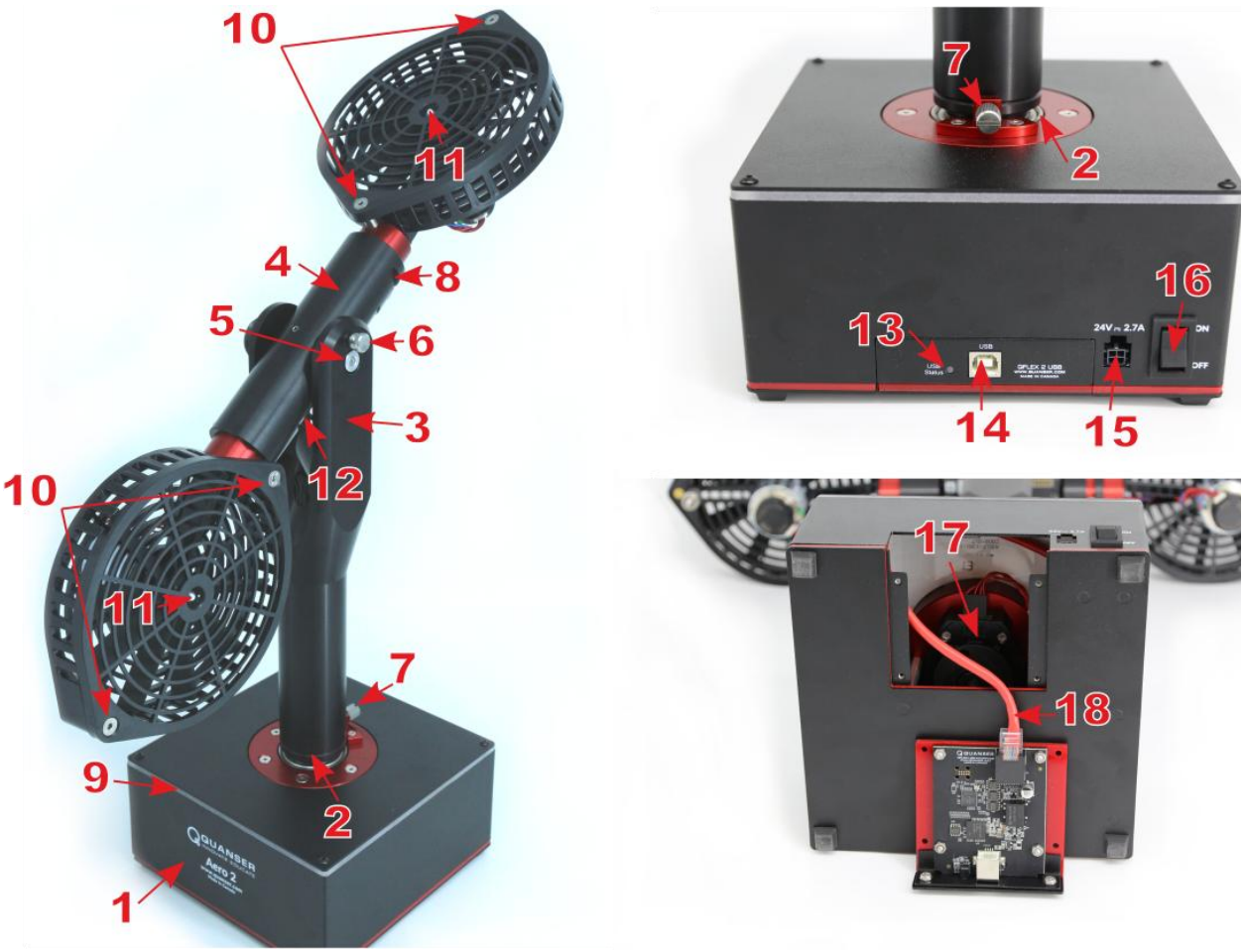

Figure 2. Quanser Aero 2 Components

ID	Component	ID	Component
1	Base	10	Propeller guard screws
2	Yaw pivot	11	Propeller hub
3	Support yolk	12	IMU (on Aero 2 core board)
4	Aero 2 body	13	Interface power LED
5	Pitch pivot	14	Data connector (USB version shown)
6	Pitch lock	15	Power connector
7	Yaw lock	16	Power switch
8	Thruster rotation locks	17	Yaw encoder and slip ring
9	Base LEDs	18	Aero 2 QFLEX 2 internal data bus

Table 1. Quanser Aero 2 Components

Configuration

The Aero 2 has three different configurations:

- 1 DOF VTOL: Pitch axis is unlocked, and Yaw axis is locked. Both rotors are horizontal.
- 2 DOF Helicopter: Both pitch and yaw axes are unlocked. Rear rotor is vertical.
- Half-Quadrotor: Pitch axis is locked, and yaw-axis is unlocked. Both rotors are horizontal.

The tail rotor (motor 1) can be rotated to alternate between the half-quad/1-dof configuration as well as the 2-dof configuration, as shown in Figure 3. Use the pitch lock, thruster rotation lock and/or yaw lock to get the desired configuration.

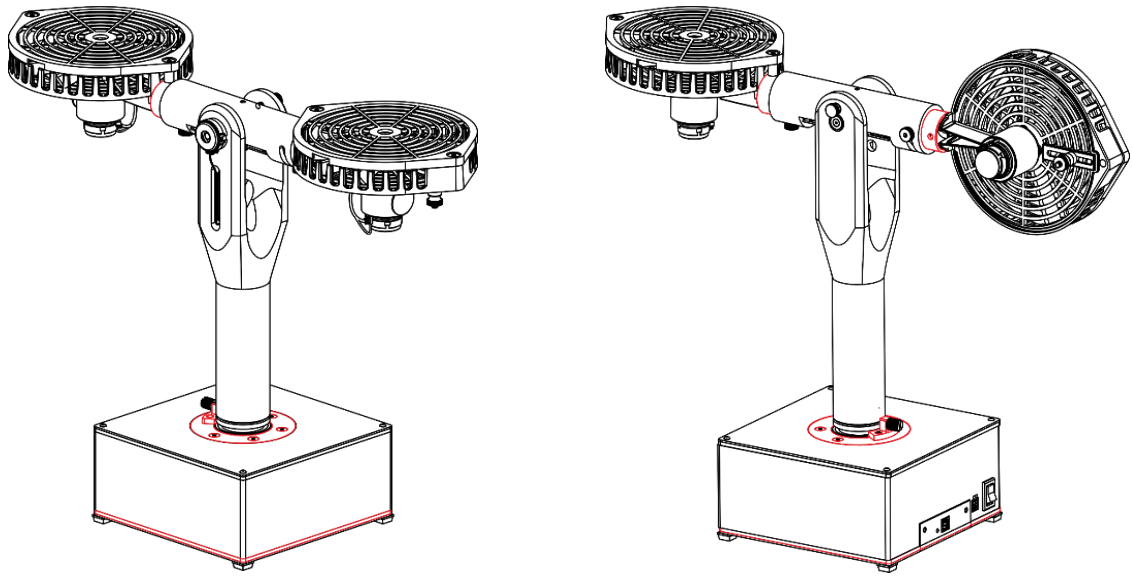

Half-Quad configuration
(pitch locked, yaw free), or
1 DOF (yaw locked, pitch free)

2 DOF configuration

Figure 3. Configurations of the Aero 2 platform

See the Balancing section on how to balance the Quanser Aero 2 unit.

System Schematic

The Quanser Aero 2 can be configured with one of two different I/O interfaces: the QFLEX 2 USB, and the QFLEX 2 Embedded. The QFLEX 2 USB provides a USB interface for use with a computer. The QFLEX 2 Embedded provides a 4-wire SPI interface for use with an external microcontroller board.

The interaction between the different system components on the Quanser Aero 2 is illustrated in Figure 4. On the data acquisition (DAQ) device block, the motor position encoders are connected to Encoder Input (EI) channels #0 and #1. EI #2 reads the pitch angle of the Aero body, and EI #3 reads the yaw angle of the yoke. The Analog Output (AO) channels are connected to the power amplifier command, which then drives the DC fan motors. The DAQ Analog Input (AI) channels are connected to the PWM amplifier current sense circuitry. The DAQ also controls the integrated tri-colour LEDs via an internal serial data bus. The DAQ can be interfaced to the PC or laptop via USB link in the QFLEX 2 USB, or to an external microcontroller via SPI in the QFLEX 2 Embedded. The diagram shown in Figure 4 illustrates the main Quanser Aero components and how they interact with a data acquisition (DAQ) device.

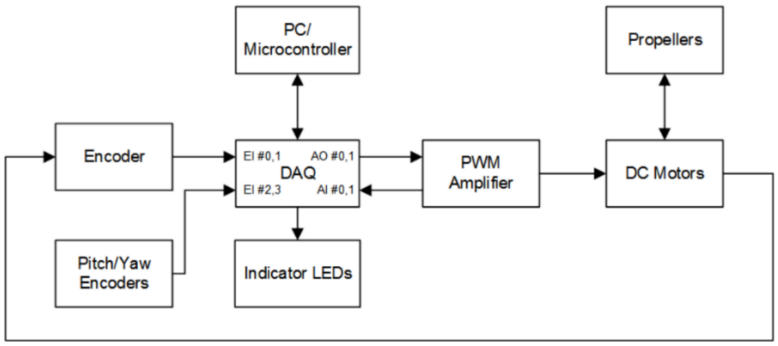

Figure 4. Interaction between Quanser Aero 2 system components

Handling and Setup

When moving the Quanser Aero 2, lift it by gripping the support yolk just above the yaw pivot. Support the base with your other hand.

> **Warning** Do not lift the Aero 2 by the bar connecting both propellers.

Figure 5. Correct and incorrect locations to lift Quanser Aero 2

To operate your Quanser Aero 2, follow these steps,

1. Ensure that the power switch is OFF and connect the Aero 2 to a power supply.
2. Connect the Aero 2 to the PC via USB or to the microcontroller via SPI connection.
3. Ensure that a volume of space around the manipulator is dedicated as a work zone that users must stay clear of. The radius of this area should be at least 0.5 m.
4. Check that the thrusters are oriented as required and locked firmly in position using the thumbscrews.
5. Check that the pitch and yaw locking screws are engaged or disengaged as required.
6. Switch on the power switch and ensure that the status LED on the QFLEX 2 panel is green.
7. The Aero 2 is ready for use.

Hardware Components

i. DC Motors

The Quanser Aero 2 includes two direct drive 18V brushed DC motors. The motor specifications are given in Table 2.2. The Quanser Aero 2 contains two Allied Motion CL40 Series Coreless DC Motors, model 16705. The complete specification sheet of the motor is available at: https://www.alliedmotion.com/wp-content/uploads/datasheets/Allied_Motion_Datasheet-CLSeries_20170720.pdf

ii. Propellers

The Quanser Aero 2 ships with two eight-vane counter-rotating 3D printed propellers. These propellers have been specially designed to have high dynamic coupling. As such they will apply a strong cross-torque during thrust. These propellers are manufactured custom for Quanser and can be replaced by contacting your local Quanser distributor.

If a more efficient, but less coupled configuration is desired, the Aero 2 also ships with high-efficiency propellers. The high-efficiency propellers are APC 5.0x4.6 propellers, models LP05046E/EP. More information on the propellers can be found on the Advanced Precision Composites website (www.apcprop.com).

Both propeller types are mounted to the thruster motors using aluminum prop adapters with collets. The propeller adaptors are E-flite part number EFLM1922.

iii. Encoders

There are three different types of encoders on the Quanser Aero 2.

The encoders used to measure the pitch of the Aero body and the angular position of the DC motors on the Quanser Aero 2 are single-ended optical shaft encoders. The motor encoders output 2048 counts per revolution in quadrature mode (512 lines/rev). This encoder is the US Digital E8P-512-118 single-ended optical shaft encoder. While the pitch encoder is 2880 counts per revolution in quadrature mode (720 lines/rev) consisting of a US Digital E8P-720-118 single-ended optical shaft encoder.

The final encoder is used to measure the yaw position of the support yolk is the US Digital E3-1024-984 optical encoder, which outputs 4096 counts per revolution in quadrature (1024 lines/rev)

iv. Inertial Measurement Unit (IMU)

The Quanser Aero 2 includes an integrated IMU mounted on the Aero core board. This module allows for real-time measurement of the angular position and velocity about all three of the primary axes of the Aero body. The accelerometer has a 16-bit, +/-8g range and the gyroscope has a 16 bit, +/-500 deg/s range.

The IMU incorporated into the Quanser Aero 2 is the TDK IIM-42652 inertial module.

v. Power Supply

The Quanser Aero is equipped with an external DC power supply which provides 24.0 V power at up to 2.71 A for the sensors and motors. This supply is intended for use with 100-240 VAC at 50-60 Hz.

Only the provided power supply and AC cord should be used with the Quanser Aero 2. The included supply is a TRUMPower model TTA65-24E-M4SG.

Specifications

Table 2.2 lists and characterizes the main parameters associated with the Quanser Aero..

Symbol	Description	Value	Units
	DC Motor		
V_{nom}	Nominal input voltage	18.0	Volts
τ_{nom}	Nominal torque	22.0	mN·m
$\dot{\omega}_{\mathrm{nom}}$	Nominal angular velocity	3050	RPM
I_{nom}	Nominal current	0.540	Amps
R_{m}	Terminal resistance	8.4	Ω
k_t	Torque constant	0.042	N· m/A
k_m	Motor back-EMF constant	0.042	V/(rad/s)
J_m	Rotor inertia	4.0×10^{-6}	kg· m²
L_m	Rotor inductance	1.16	mH
	Aero Body		
M_b	Mass of body	1.07	kg
D_m	Displacement of Center of Mass (z-axis)	-2.42	mm
J_p	Pitch inertia (y-axis)	2.32×10^{-2}	kg· m²
J_y	Yaw inertia (z-axis)	2.38×10^{-2}	kg· m²
D_t	Thrust displacement	0.168	m
	Amplifier		
	Amplifier type	PWM	
	Peak current	2	Amps
	Continuous current	0.5	Amps
	Output voltage range (recommended)	± 18	Volts
	Output voltage range (maximum)	± 24	Volts

Table 2. Quanser Aero 2 System Parameters

Balancing

The Quanser Aero 2 should be balanced before running any of the experiments. There are two tungsten weights mounted on each rotor that can be adjusted to balance the system, as shown in Figure 6.

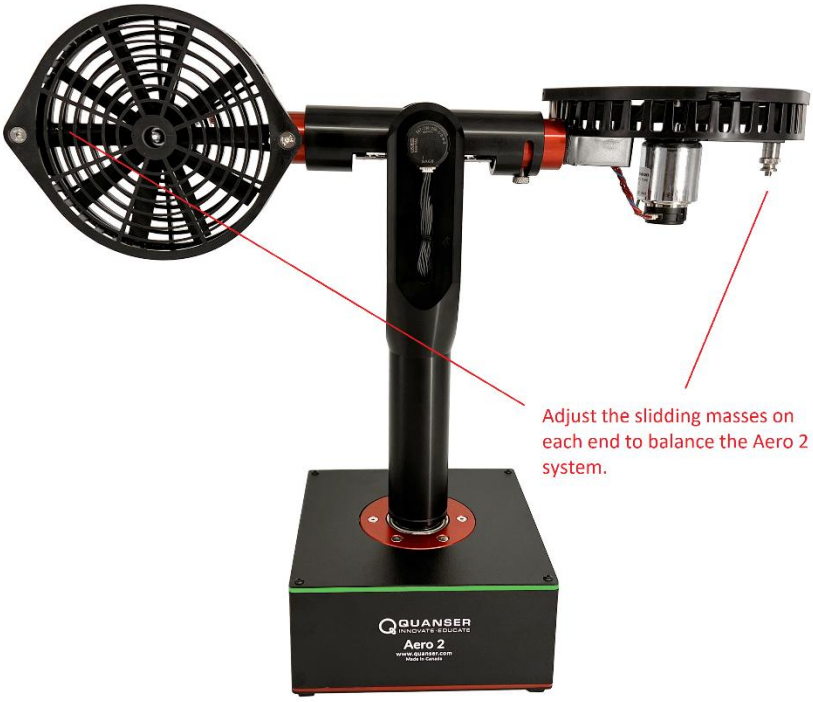

Figure 6. Mass sliders for leveling the Aero 2

Start by moving the sliding masses all the way outwards. If the Aero 2 is not balanced, identify the rotor that is leaning downwards. Move the mass slider on this rotor inwards and check again. Alternatively, move the mass sliders all the way in and move the mass slider on the side leaning up outwards until the unit is level.

Environmental

The Quanser Aero 2 is designed to function under the following environmental conditions:

- Standard rating
- Indoor use only
- Atmospheric conditions
    - Temperature - 15˚C to 35˚C
    - Altitude - up to 2000 m
    - Relative humidity - 30% to 60%
    - Air Pressure – 86 kPa (860 mbar) – 106 kPa (1060 mbar)
- Pollution Degree 2
- Mains supply voltage fluctuations up to 10% of nominal voltage
- Maximum transient overvoltage 2500 V

Electrical Considerations

	ESD warning	The Quanser Aero 2 core board components are sensitive to electrostatic discharge. Before touching the board, ensure that you have been properly grounded.
	Caution	Always monitor the current draw and motor temperature to ensure that you do not exceed the maximum current draw or 50°C.
	Caution	Do not allow conductive material to touch the Aero 2 core board as it can short and damage the electronics.

© Quanser Inc., All rights reserved.

QUANSER
INNOVATE · EDUCATE

Solutions for teaching and research. Made in Canada.