# GMP24-370CA 24mm planetary gearbox plus 370 permanent magnet DC motor

| | | | | |
|---|---|---|---|---|
| 模数 Module | 0.4 | | | |
| 额定负载 Rated torque (kg.cm) | 5.0 kg.cm max | | | |
| 瞬间允许力矩<br>Max momentary tolerance torque (kg.cm) | 10.0 kg.cm max | | | |
| 减速比 Reduction ratio | 1/4 | 1/14<br>1/19<br>1/27 | 1/51、1/71<br>1/100、1/139 | 1/189、1/264<br>1/369、1/516<br>1/720 |
| 齿轮箱减速级数 Number of gear stages | 1 | 2 | 3 | 4 |
| 减速箱长度 L (mm) | 23 | 28 | 33 | 38 |

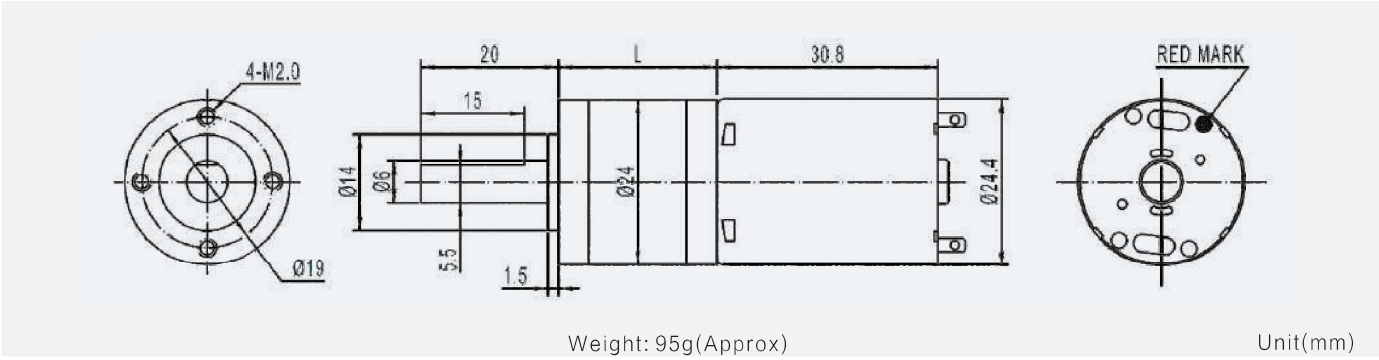


## 减速电机技术参数Gear Motor Technical Data

| | 减速比Reduction ratio | 19 | 27 | 51 | 71 | 100 | 139 | 189 | 264 | 369 | 516 |
|---|---|---|---|---|---|---|---|---|---|---|---|
| 6.0V | 空载转速No-load speed(rpm) | 280 | 195 | 105 | 75 | 55 | 40 | 29 | 21 | 15 | 11 |
| | 负载转速Rated speed(rpm) | 250 | 180 | 95 | 68 | 48 | 35 | 25 | 18 | 13 | 9 |
| | 负载力矩Rated torque(kg.cm) | 0.3 | 0.5 | 0.7 | 1.0 | 1.4 | 2.0 | 2.5 | 3.5 | 4.4 | 5.0 |
| 12.0V | 空载转速No-load speed(rpm) | 280 | 195 | 105 | 75 | 55 | 40 | 29 | 21 | 15 | 11 |
| | 负载转速Rated speed(rpm) | 250 | 180 | 95 | 68 | 48 | 35 | 25 | 18 | 13 | 9 |
| | 负载力矩Rated torque(kg.cm) | 0.3 | 0.5 | 0.7 | 1.0 | 1.4 | 2.0 | 2.5 | 3.5 | 4.4 | 5.0 |

## 单电机技术参数Motor Technical Data
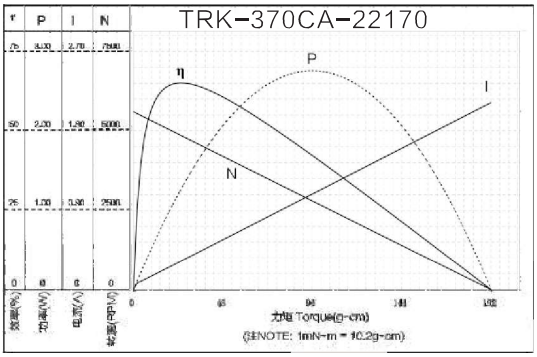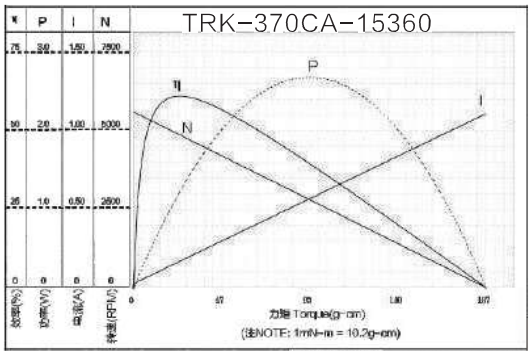
| 电机型号 Motor model | 额定电压 Rated voltage | 无负荷No-load | | 额定 Rated | | | | 堵转 Stall | |
|---|---|---|---|---|---|---|---|---|---|
| | | 转速 Speed | 电流 Current | 转速 Speed | 力矩 Torque | 电流 Current | 功率 Power | 力矩 Torque | 电流 Current |
| | VDC | r/min | mA | r/min | g.cm | mA | W | g.cm | A |
| TRK-370CA-22170 | 6.0 | 5600 | 50 | 4870 | 25 | 320 | 1.25 | 191 | 2.1 |
| TRK-370CA-15360 | 12.0 | 5600 | 25 | 4850 | 25 | 170 | 1.24 | 186 | 1.1 |