产品规格书

Products Specification

Products Name:16KG Digital servo	Products No.

1.使用条件 Apply Environmental Conditon

No.	Item	Specification
1.1	储存温度Storage Temperature Range	-30° C～80° C
1.2	运行温度Operating Temperature Range	-25° C～70° C

2.测试环境 Standard Test Environment

No.	Item	Specification
2.1	温度 Temperature Range	-25° C～70° C
2.2	湿度 Humidity Range	65%±10%

3. 机械特性 Mechanical Specification

No.	Item	Specification
3.1	舵机尺寸 Size	40.8*20.2*28.7mm
3.2	重量 Weight	60g±5%
3.3	齿轮类型 Gear type	6 Metal
3.4	机构极限角度 Limit angle	360°
3.5	轴承 Bearing	2BB
3.6	出力轴 Horn gear spline	25T 直径:5.9mm
3.7	摆臂 Horn type	Plastic, POM
3.8	外壳 Case	Aluminum alloy
3.9	舵机线 Connector wire	320mm±5mm
3.10	马达 Motor	Carbon brush motor
3.11	防水性能 Splash water resistance	IP65

4.电气特性 Electrical Specification

No.	工作电压 Operating voltage	4.8V	7.2V	8.4V
4.1	静态电流 Idle current	mA	mA	mA
4.2	空载转速 No load speed	0.12sec/60°	0.09sec/60°	0.07sec/60°
4.3	空载电流 Runnig current	210mA	260mA	300mA
4.4	堵转扭矩 Peak stall torque	11.5kg.cm	14.5kg.cm	16.5kg.cm
4.5	堵转电流 Stall current	2000mA±10%	2700mA±10%	3000mA±10%
4.6	工作电压范围 Working voltage range	4.8-8.4V		

5.控制特性 Control Specification

No.	Item	Specification
5.1	控制信号 Command signal	Pulse width modification
5.2	放大器类型 Amplifier type	Digital controller
5.3	脉冲宽度范围 Pulse width range	500～2500usec
5.4	中点位置 Neutral position	1500usec
5.5	旋转角度 Running degree	180° ±3° (when 500～2500usec)
5.6	死区宽度 Dead band width	5 usec
5.7	旋转方向 Rotating direction	Counterclockwise (when 1000～2000usec)

6.外观尺寸The Drawings:

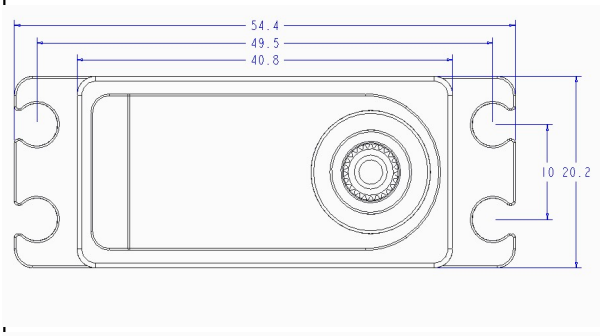

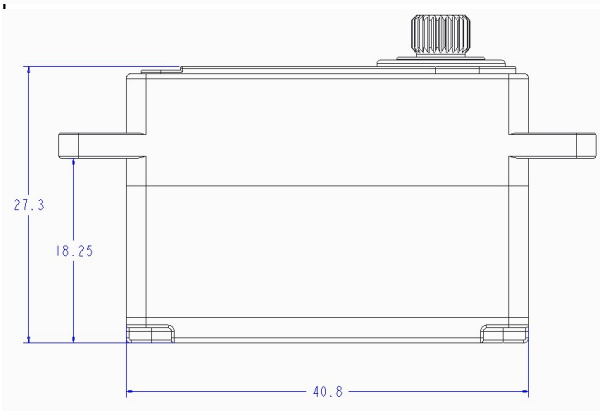
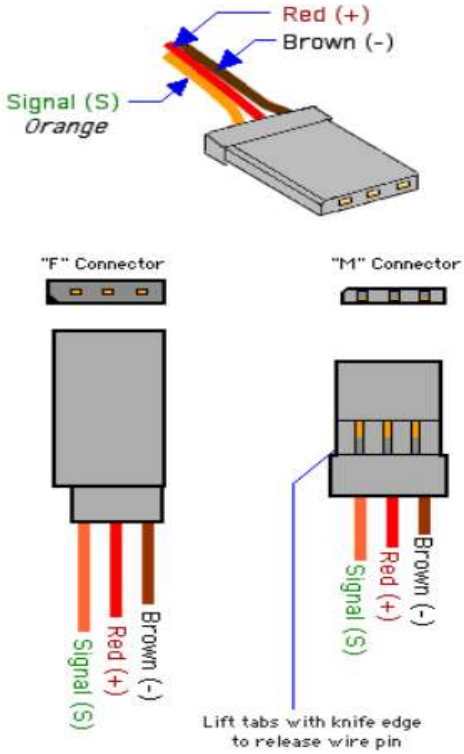
导线颜色及定义The Wire and plug: