QUANSER
INNOVATE · EDUCATE

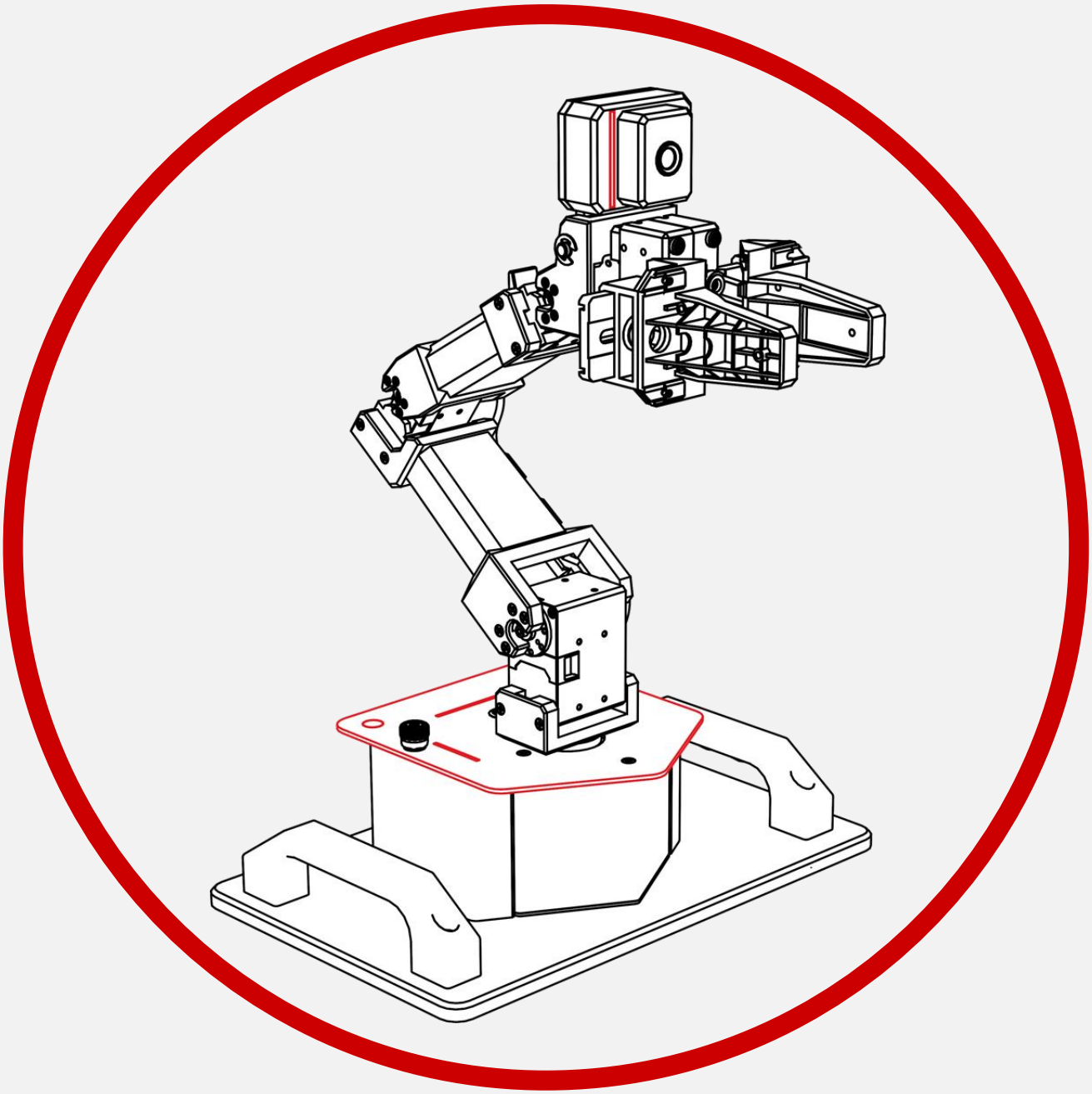

Qarm Mini

User Manual

Setup and Configuration

V1.0 – 1st May 2025

© 2025 Quanser Consulting Inc., All rights reserved.

For more information on the solutions Quanser offers, please visit the web site at: http://www.quanser.com

Quanser Consulting Inc.
119 Spy Court
Markham, Ontario
L3R 5H6, Canada

info@quanser.com
Phone : 19059403575
Fax : 19059403576
printed in Markham, Ontario.

This document and the software described in it are provided subject to a license agreement. Neither the software nor this document may be used or copied except as specified under the terms of that license agreement. Quanser Consulting Inc. ("Quanser") grants the following rights: a) The right to reproduce the work, to incorporate the work into one or more collections, and to reproduce the work as incorporated in the collections, b) to create and reproduce adaptations provided reasonable steps are taken to clearly identify the changes that were made to the original work, c) to distribute and publicly perform the work including as incorporated in collections, and d) to distribute and publicly perform adaptations. The above rights may be exercised in all media and formats whether now known or hereafter devised. These rights are granted subject to and limited by the following restrictions: a) You may not exercise any of the rights granted to You in above in any manner that is primarily intended for or directed toward commercial advantage or private monetary compensation, and b) You must keep intact all copyright notices for the Work and provide the name Quanser for attribution. These restrictions may not be waved without express prior written permission of Quanser.

Caution

This equipment is designed to be used for educational and research purposes and is not intended for use by the public. The user is responsible for ensuring that the equipment will be used by technically qualified personnel only. Users are responsible for certifying any modifications or additions they make to the default configuration.

FCC Notice This device complies with Part 15 of the FCC rules. Operation is subject to the following two conditions: (1) this device may not cause harmful interference, and (2) this device must accept any interference received, including interference that may cause undesired operation.
Note: This equipment has been tested and found to comply with the limits for a Class A digital device, pursuant to part 15 of the FCC Rules. These limits are designed to provide reasonable protection against harmful interference when the equipment is operated in a commercial environment.

Industry Canada Notice This Class A digital apparatus complies with CAN ICES-3 (A). Cet appareil numérique de la classe A est conforme à la norme NMB-3 (A) du Canada.

Waste Electrical and Electronic Equipment (WEEE)
This symbol indicates that waste products must be disposed of separately from municipal household waste, according to Directive 2012/19/EU of the European Parliament and the Council on waste electrical and electronic equipment (WEEE). All products at the end of their life cycle must be sent to a WEEE collection and recycling center. Proper WEEE disposal reduces the environmental impact and the risk to human health due to potentially hazardous substances used in such equipment. Your cooperation in proper WEEE disposal will contribute to the effective usage of natural resources.

CE Compliance CE

This product meets the essential requirements of applicable European Directives as follows:

- 2014/30/EU; Electromagnetic Compatibility Directive (EMC)

Warning: This is a Class A product. In a domestic environment this product may cause radio interference, in which case the user may be required to take adequate measures.

Table of Contents

Table of Contents 2

A. Presentation 3

B. Configuration 5

C. Handling and Setup 7

D. Workspace 8

E. Hardware Components 9

- i. Base and Joints 9
  - 1. Sensing 9
  - 2. Actuation 10
- ii. Gripper 10
- iii. Vision 10
- iv. Attachment to QBot Platform 11

F. Specifications 12

G. Environmental 13

H. Electrical Considerations 13

A. Presentation

Quanser's QArm Mini manipulator, pictured in Figure 1, is a 4 degree of freedom (DOF) serial manipulator for education and research in a lab environment. The QArm Mini can be utilized directly with a support plate or mounted within a QBot Platform.

Complete with actuation modes for PWM and position, as well as a suite of sensors, the arm's roll-pitch-pitch-pitch configuration allows for a high reachable workspace, suitable for numerous teaching applications. The parallel finger gripper allows you to interact with objects that you can also monitor using the end-effector RGB camera. Numerous components of the QArm Mini are listed in Table 1 and shown in Figure 2.

Figure 1. QArm Mini 4DOF serial manipulator

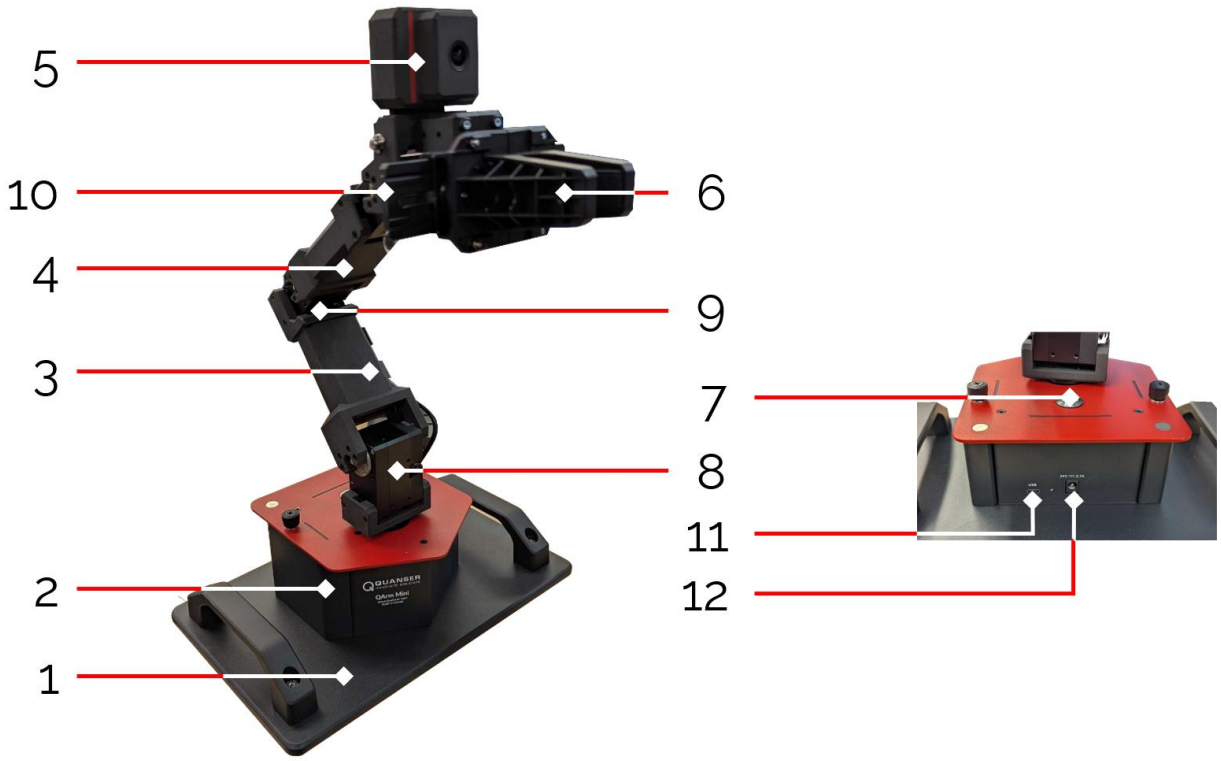

Figure 2. QArm Mini Components

ID	Component	ID	Component
1	Base Plate	**7**	Power Switch
2	Base	**8**	Shoulder joint
3	Upper Arm	**9**	Elbow joint
4	Lower Arm	**10**	Wrist joint
5	Camera	**11**	USB-C data/camera connector
6	Gripper	**12**	Power Connector

Table 1. Qarm Mini Components

B. Configuration

The QArm Mini consists of 4 joints in a roll-pitch-pitch-pitch configuration – the base, shoulder, elbow, and wrist joints. The first joint picks the sagittal plane, and the remaining three joints position the end-effector tip dexterously. A combination of the three pitch joints also determines the overall end-effector orientation. Most of the workspace of the manipulator is a reachable workspace and not dexterous. Note that the camera is placed just before the wrist and does not rotate with the wrist. Thus, the camera can capture the rotation of an object that interacts with the gripper. The home pose of the manipulator and its link lengths are shown in Figure 3, with parameter values in Table 2. The net reach of the manipulator is $0.382\ \mathrm{m}$ horizontally and $0.512\ \mathrm{m}$ vertically above the worksurface.

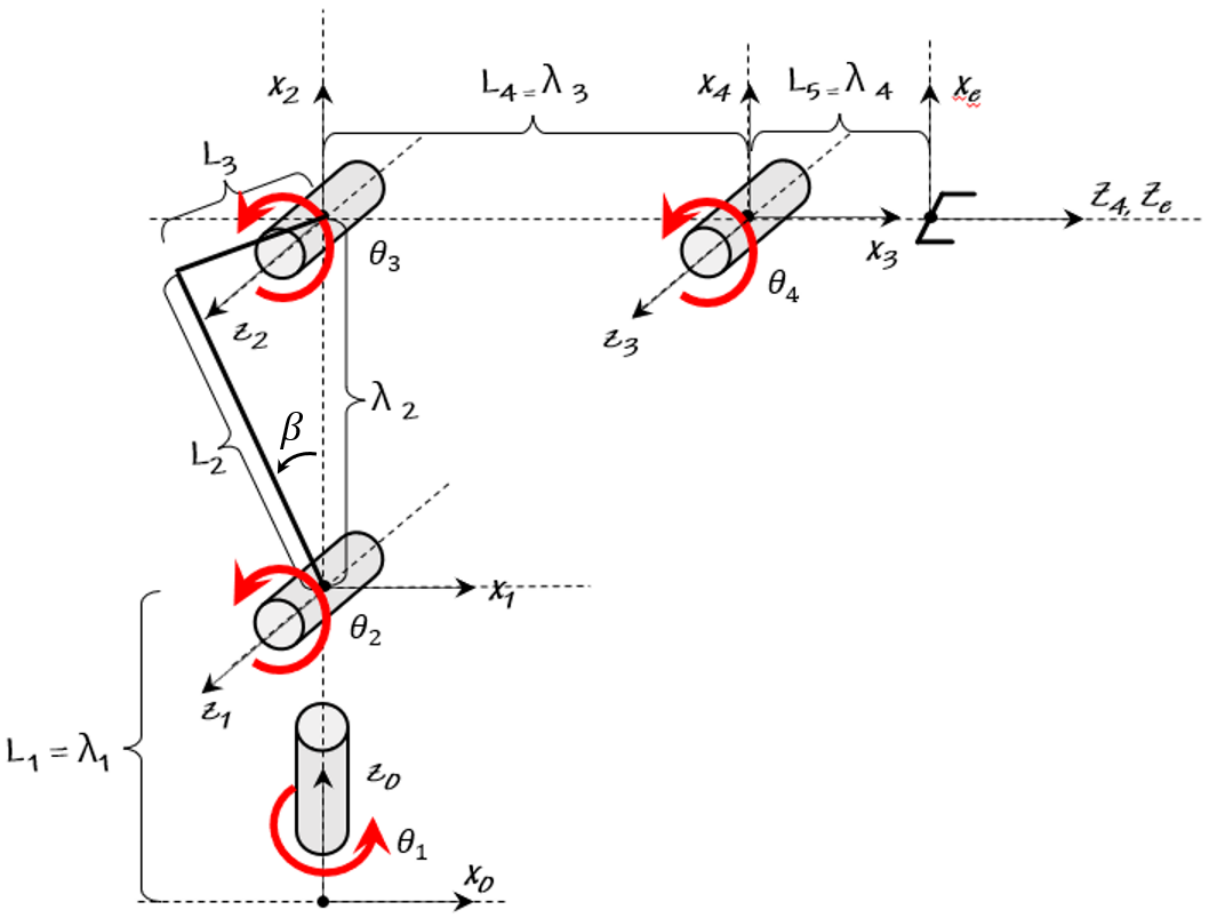

Figure 3. QArm Mini Geometry and Reference Assignment (Standard DH)

Parameter	Value
L_1	$0.138\ m$
L_2	$0.124\ m$
L_3	$0.023\ m$

Parameter	Value
L_4	$0.124\ m$
L_5	$0.132\ m$
β	$8.13°$

Table 2. QArm Mini Parameters

Note:

The base height $L_1 = 0.138\ m$ includes the thickness of the base plate ($0.008\ m$) but not the rubber feet below the base plate. As such, there will be an additional clearance between the manipulator and the horizontal work surface it is placed on.

Note:

The last link length $L_5 = 0.132\ m$ is the distance from the wrist motor axis to an axis $0.01m$ inside the top of the end-effector. As such, using the kinematic formulations provided will result in gripping an object within the grasp of the fingers.

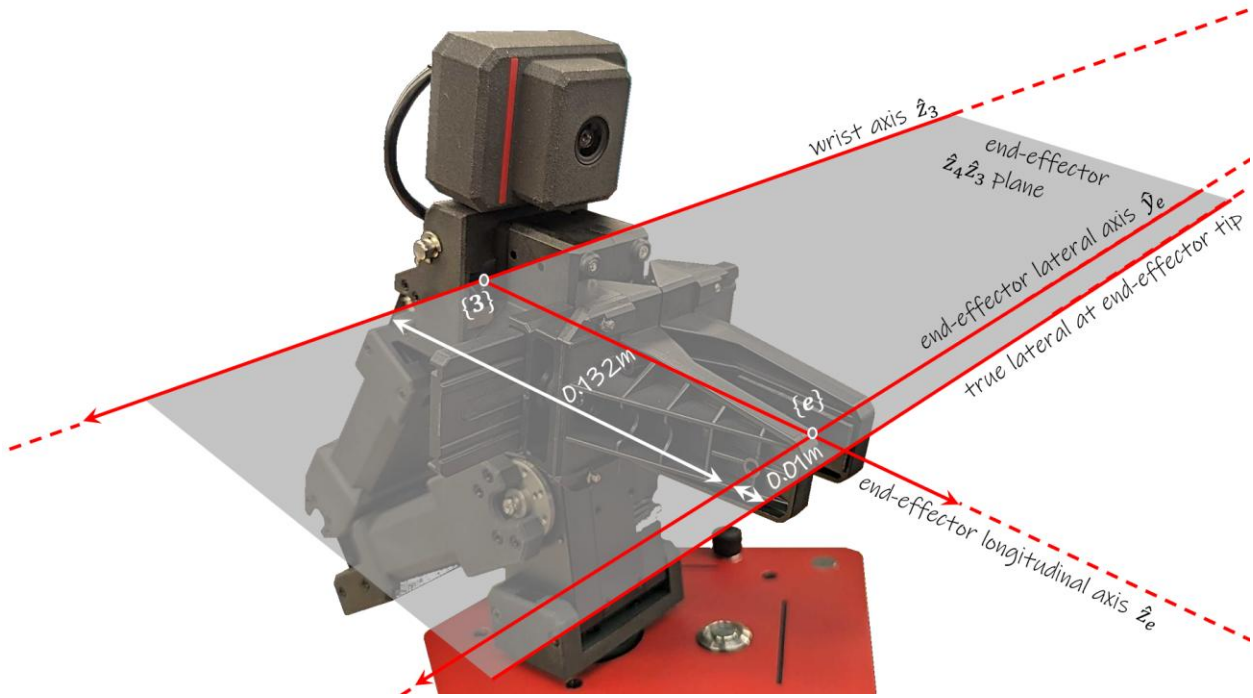

C. Handling and Setup

To move the Qarm Mini, follow these steps,

1. Ensure that the Qarm Mini is placed in the rest position as shown in Figure 4a and the camera is swiveled up and locked in either of the two locking positions.
2. Connect the QArm Mini to your computer via the provided USB-A to USB-C cable.
3. Connect the QArm Mini's power connector using the provided power supply.
4. Turn ON the QArm Mini using the power switch shown in Figure 1 (item #7). The power LED should light up red.
5. The QArm Mini is now ready to use.

a. Rest Configuration

b. Home Configuration

Figure 4. Rest and Home Configurations of the QArm (note the handlebars on the base)

Note:

1. Always ensure that the QArm Mini is connected to its base plate for safety, and to prevent its own base from tilting over when the manipulator extends towards maximum reach.
2. The provided software applications consider the pose in Figure 4b as the HOME pose, commanding the QArm Mini to go there on application start.
3. When an application is not actively running, the arm waits in PWM mode, where the user can manipulate the arm freely. Feeling resistance during manipulation in this mode is expected.
4. The camera swivel locks in two positions, focusing the camera feed parallel to the gripper, or aimed at the fingers of the gripper.

If the manipulator does not move or goes limp on power up contact tech@quanser.com.

D. Workspace

The manipulator has a net horizontal reach of $0.382\mathrm{m}$. The net vertical reach stands at $0.512\mathrm{m}$ due to the added height from the base. Figure 5a shows a vertical slice of the workspace, where the reach of the manipulator is displayed. This slice can be rotated as shown in Figure 5b for a total of 315 degrees.

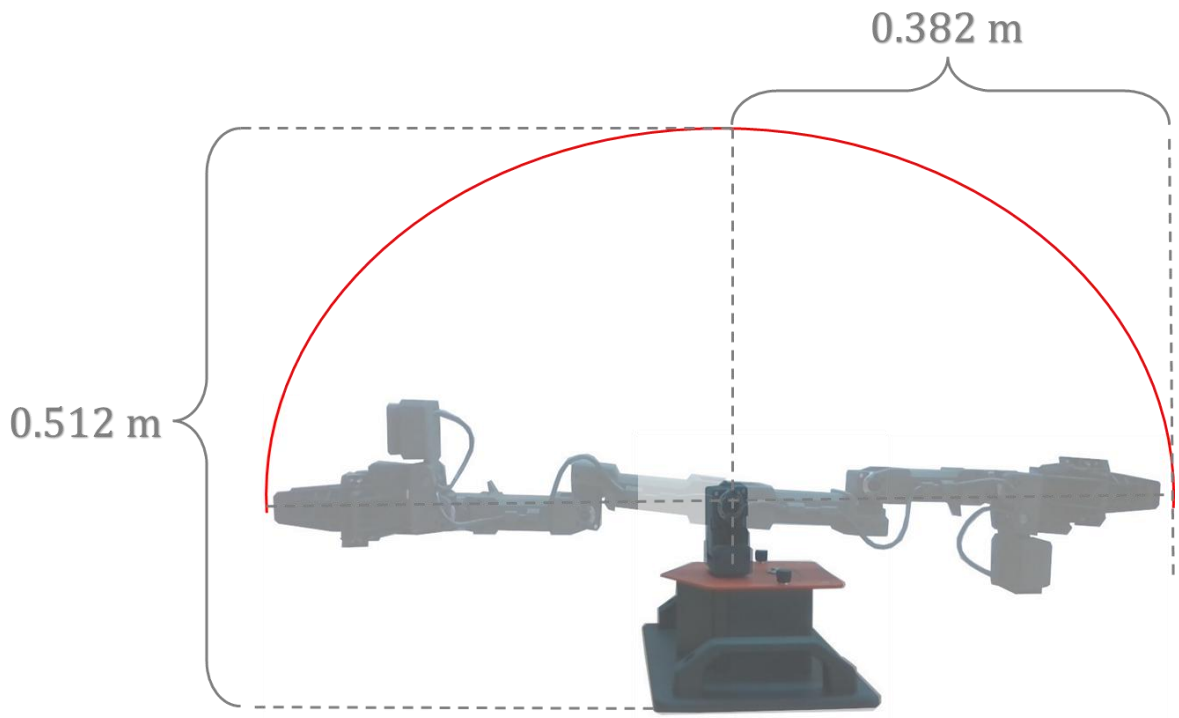

a. side view

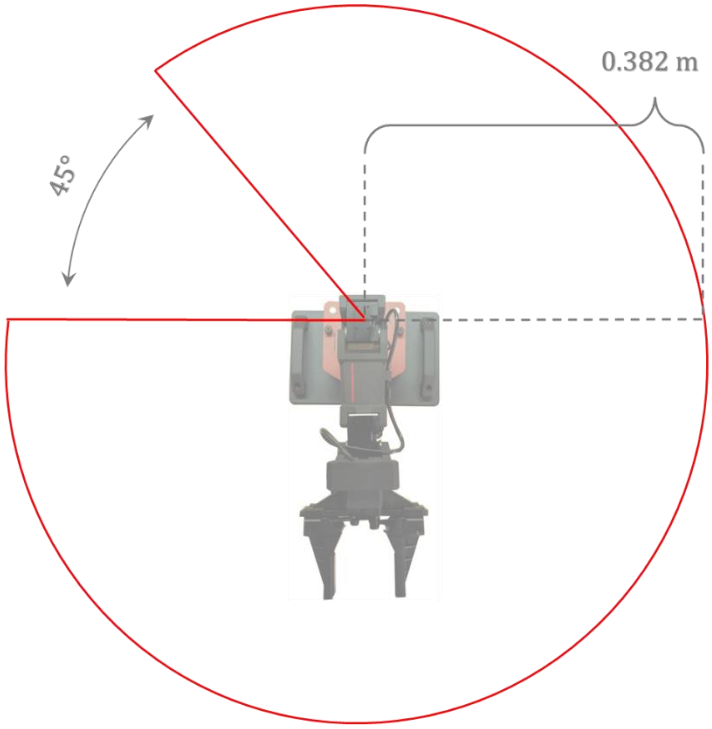

c. top view

Figure 5. Reachable workspace of the QArm Mini manipulator

E. Hardware Components

i. Base and Joints

The QArm Mini base houses the base joint and provides peripherals for interfacing with the arm via the USB-C connector. See Figure 2 for more details on the base peripherals.

All the joints use Dynamixel servo motors that are complete with 12-bit programmable magnetic encoder (4096 counts/rev, see attached datasheet or here), velocity measurement, current sensors, and temperature sensors. The base, elbow, and wrist use the XM430-W350-T Dynamixel servomotor. The shoulder joint uses XM540-W270-T Dynamixel servomotor. For safety, the RS-485 command chain is not exposed. More information on the Dynamixels is available in the datasheets attached, and can also be found here for the XM540-W270-T, here for the XM430-W350-T.

1. Sensing

The QArm Mini's sensing interface directly provides joint position data in radians, joint speed data in rad/s, current in Amperes and Temperature in °C. The PWM reading is also available as a signed percentage corresponding to a voltage in the range of -12 to 12V.

2. Actuation

Two write modes are available – a Position mode and PWM mode. The Position mode allows you to directly command a joint position in radians, and low-level closed loop controllers acquire the position for you. In this mode, the PWM sense provides the PWM command output of the low-level controllers. The PWM mode is open loop. Ensure that you have a stable controller or are supporting the QArm Mini when operating it in this mode to prevent the arm from accidental damage.

ii. Gripper

The QArm Mini uses a parallel 2-finger gripper. This system uses a single XC430-W240-T Dynamixel servomotor to actuate two fingers. Foam pads on the fingers improve the grip around the shape of an object (see Figure 6). The datasheet for the gripper actuator can be found here.

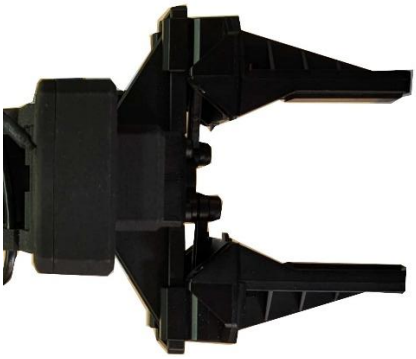

Figure 6. Parallel 2 finger gripper

Figure 7. CS-USB-IMX307 Starlight Camera

iii. Vision

The QArm Mini platform comes equipped with a CS-USB-IMX307 Starlight camera (Figure 7). It includes a YT1.6-3I-1/2.7-8M lens, The datasheet can be found here. The camera can provide RGB data at frame rates and resolutions summarized in Table 3. More information can be found here.

RGB	
Resolution	Max. Frame Rate
1920 x 1080	30
1280 x 720	60
640 x 360	30

Table 3. CS-USB-IMX307 resolutions and frame rates

iv. Attachment to QBot Platform

The QArm Mini platform may be attached to the QBot Platform by the following steps:

1. Remove the QArm Mini cover from the QBot Platform (Figure 8a).
2. If the QArm Mini is on its base plate, loosen the two thumb screws (Figure 8b) to release it from the base plate.
3. Holding the QArm Mini by its base, remove the QArm Mini from the base plate (Figure 8c).
4. Connect USB and power cable (Figure 8d).
5. Place the QArm Mini on QBOT Platform and tighten thumbscrews (Figure 8e)

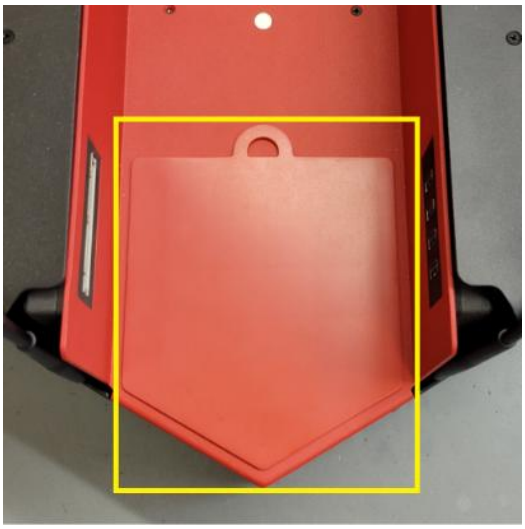

a. QArm Mini cover on QBot Platform

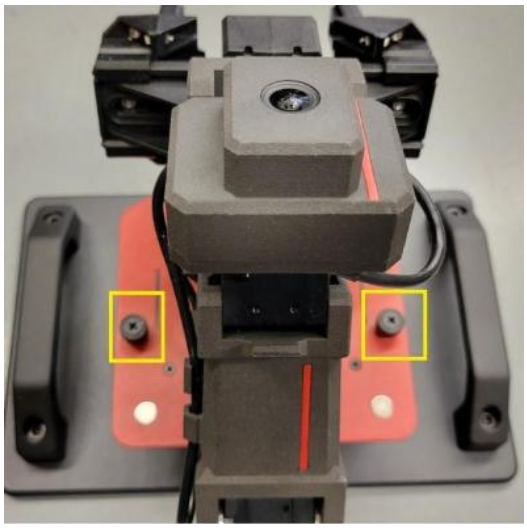

b. QArm Mini thumb screws on base plate

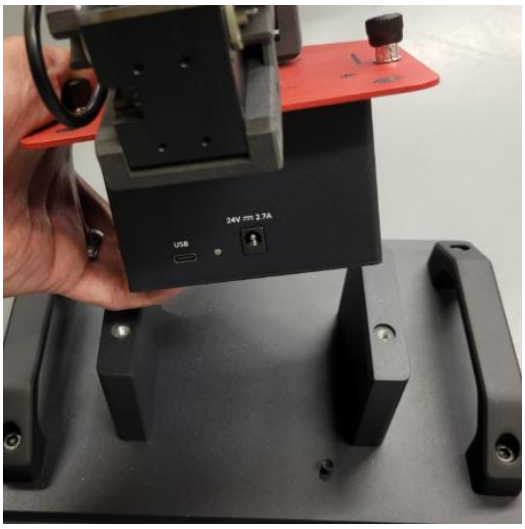

c. Removing QArm Mini from base plate

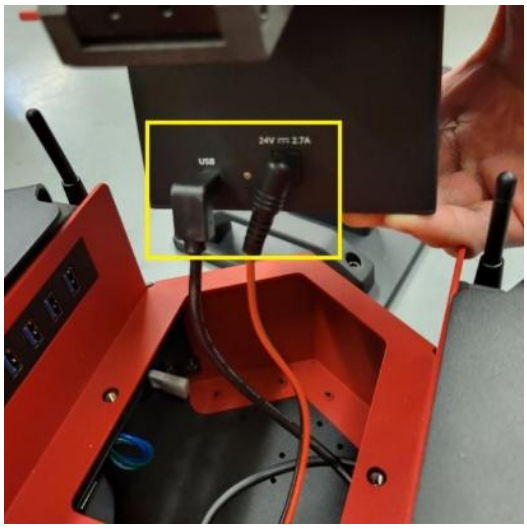

d. QArm Mini USB and power cables

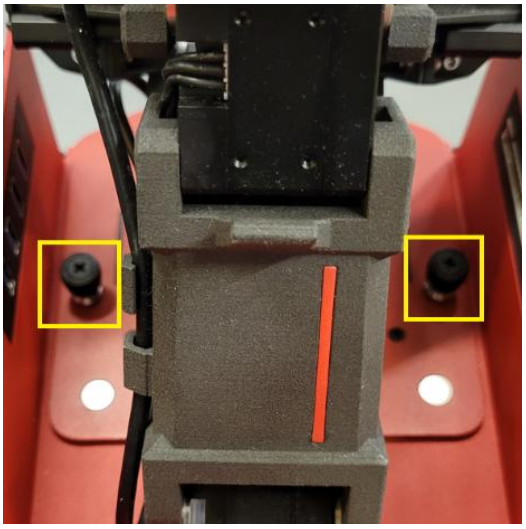

e) QArm Mini thumb screws on QBot Platform

Figure 8. Attaching QArm Mini to QBot Platform

To remove the QArm Mini from the QBot Platform, follow these steps:

1. Loosen the two thumb screws (Figure 8e) used to secure the QArm Mini onto the QBot Platform.
2. Holding the QArm Mini by its base, remove the QArm Mini from the QBot Platform and disconnect the USB and power cables (Figure 8d).

F. Specifications

The Qarm Mini's payload capacity and corresponding operation times are summarized in Table 4. The joint performance specifications are summarized in Table 5. Do not exceed the instantaneous current/torque limits for more than 0.1s.

Payload (g)	0	150
Max. Continuous Operation Time (min)	∞^{+}	15^{+}

Table 4. QArm payload capacity

[+]durations tested at room temperature

Joint Specifications									
#	**Item**		**Base**	**Shoulder**	**Elbow**	**Wrist**	**Units**	**Gripper**	**Units**
1	Joint range	Min. Max	-90 $+225$	0 $+180$	0 -135	0 $+135$	degrees	0 100	%
2	Max. speed		$\pm\pi/2$	$\pm\pi/2$	$\pm\pi/2$	$\pm\pi/2$	rad/s	± 100	%/s

3	Max. acceleration		$\pm\pi/3$	$\pm\pi/3$	$\pm\pi/3$	$\pm\pi/3$	rad/s/s	± 400	%/s/s
4	Current	Instantaneous Continuous	2.3 0.6	4.4 1.1	2.3 0.6	2.3 0.6	Amps	1.4 0.35	Amps
5	Torque	Instantaneous Continuous	4.1 1.0	10.6 2.65	4.1 1.0	4.1 1.0	Nm	1.9 0.5	Nm

Table 5. QArm Mini joint specifications

G. Environmental

The QArm is designed to function under the following environmental conditions:

- Standard rating
- Indoor use only
- Atmospheric conditions
    - Temperature - 15°C to 35°C
    - Altitude - up to 2000 m
    - Relative humidity - 30% to 60%
    - Air Pressure – 86 kPa (860 mbar) – 106 kPa (1060 mbar)
- Pollution Degree 2
- Mains supply voltage fluctuations up to 10% of nominal voltage
- Maximum transient overvoltage 2500 V

H. Electrical Considerations

ESD warning	The QArm end-effector components are sensitive to electrostatic discharge. Before handling the board, ensure that you have been properly grounded.
Caution	Always monitor the current draw and motor temperature to ensure that you do not exceed the maximum current draw or 50°C.
Caution	Do not have conductive material touch the end-effector IO board as it can short and damage the electronics.
Caution	The QArm is not waterproof.

© Quanser Inc., All rights reserved.

QUANSER
INNOVATE · EDUCATE

Solutions for teaching and research. Made in Canada.