QUANSER
INNOVATE·EDUCATE

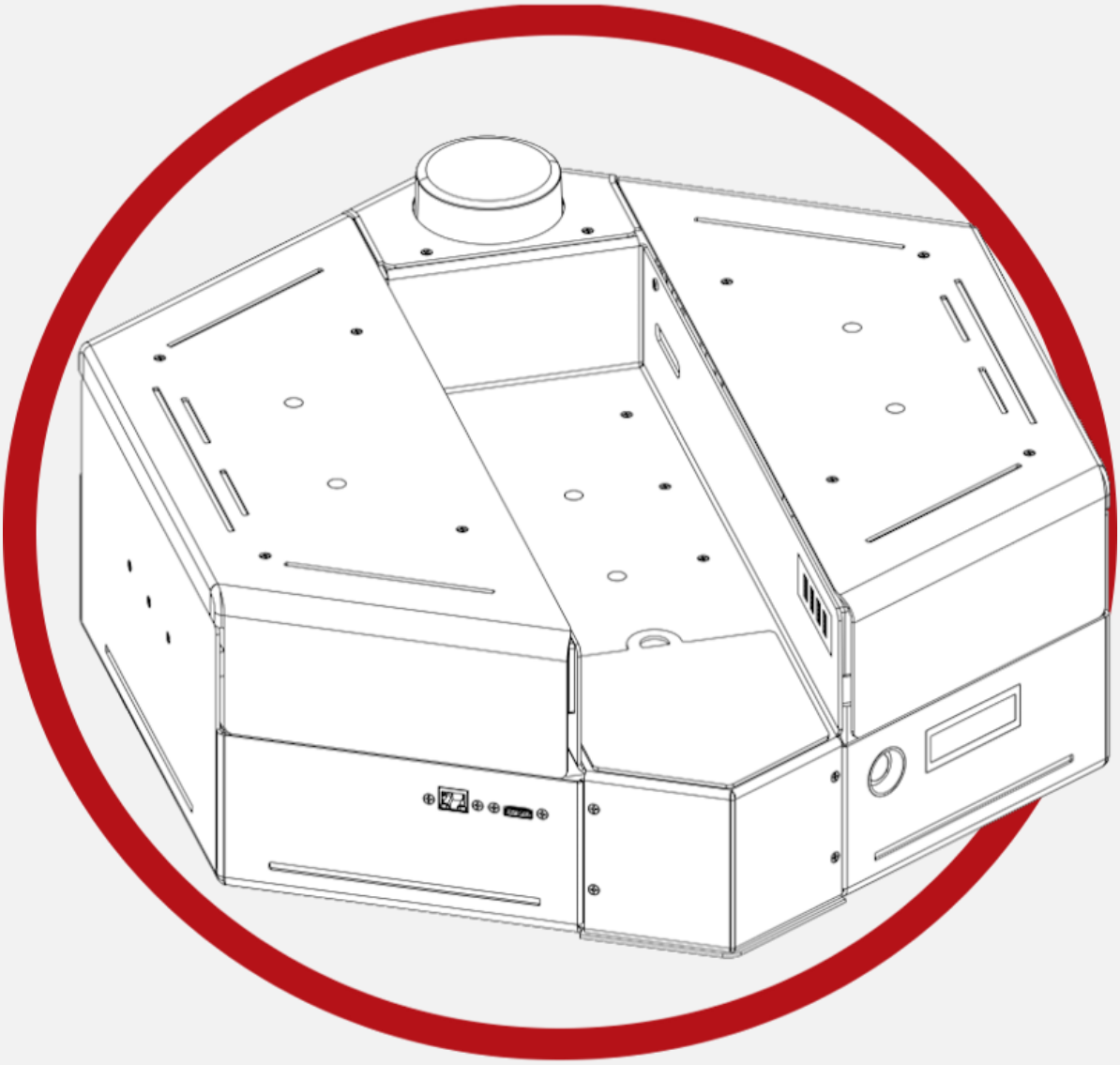

# QBot Platform

## System Hardware User Manual

$v\ 0.1\ -\ 11th\ September\ 2023$

© 2023 Quanser Inc., All rights reserved

For more information on the solutions Quanser Inc. offers, please visit the web site at: http://www.quanser.com

Quanser Inc.
119 Spy Court
Markham, Ontario
L3R 5H6, Canada

info@quanser.com
Phone : 19059403575
Fax : 19059403576
printed in Markham, Ontario.

This document and the software described in it are provided subject to a license agreement. Neither the software nor this document may be used or copied except as specified under the terms of that license agreement. Quanser Inc. grants the following rights: a) The right to reproduce the work, to incorporate the work into one or more collections, and to reproduce the work as incorporated in the collections, b) to create and reproduce adaptations provided reasonable steps are taken to clearly identify the changes that were made to the original work, c) to distribute and publicly perform the work including as incorporated in collections, and d) to distribute and publicly perform adaptations. The above rights may be exercised in all media and formats whether now known or hereafter devised. These rights are granted subject to and limited by the following restrictions: a) You may not exercise any of the rights granted to You in above in any manner that is primarily intended for or directed toward commercial advantage or private monetary compensation, and b) You must keep intact all copyright notices for the Work and provide the name Quanser Inc. for attribution. These restrictions may not be waved without express prior written permission of Quanser Inc.

Waste Electrical and Electronic Equipment (WEEE)

This symbol indicates that waste products must be disposed of separately from municipal household waste, according to Directive 2002/96/EC of the European Parliament and the Council on waste electrical and electronic equipment (WEEE). All products at the end of their life cycle must be sent to a WEEE collection and recycling center. Proper WEEE disposal reduces the environmental impact and the risk to human health due to potentially hazardous substances used in such equipment. Your cooperation in proper WEEE disposal will contribute to the effective usage of natural resources.

Caution

**This equipment is designed to be used for educational and research purposes and is not intended for use by the public.** The user is responsible to ensure that the equipment will be used by technically qualified personnel only. While the end-effector board provides connections for external user devices, users are responsible for certifying any modifications or additions they make to the default configuration.

# Table of Contents


A. Hardware Components 3

i. Embedded Computer 6

ii. LiDAR 8

iii. Intel RealSense D435 Camera 8

iv. Downward Facing Global Shutter CSI Camera 9

v. Extrinsic Matrices of QBot Sensors 9

v. Drivetrain 11

Encoder 12

vi. Battery 12

vii. IMU 14

viii. Dimensions 14

ix. Peripherals 15

vi. Landing Plate 16

B. Environment Setup 17

C. Electrical Considerations 18

## A. Hardware Components

The main QBot Platform components are listed in Table 1. These components are ID marked in Figure 1, which presents the front, back, top, and bottom views of the QBot Platform.

| ID | Component | ID | Component |
|---|---|---|---|
| 1 | LeiShen LiDAR M10P | 10 | User LEDs |
| 2 | Magnetic Attachment Points | 11 | Base Camera OV9281-160 |
| 3 | Expandable I/O | 12 | Embedded Computer |
| 4 | 10/100/1000 Base-T Ethernet jack | 13 | Drivetrain |
| 5 | 4 Port - USB3.0 Hub | 14 | Caster Wheels |
| 6 | HDMI connector | 15 | LFP batteries and battery bays |
| 7 | LCD display | 16 | LFP battery connector |
| 8 | Push Button Power Switch | 17 | Intel RealSense D435 RGBD camera |
| 9 | Landing Plate | 18 | QArm Mini Cover |

Table 1. QBot Platform Components

ESD Warning

**The QBot Platform internal components are sensitive to electrostatic discharge. Before handling the QBot Platform, ensure that you have been properly grounded.**

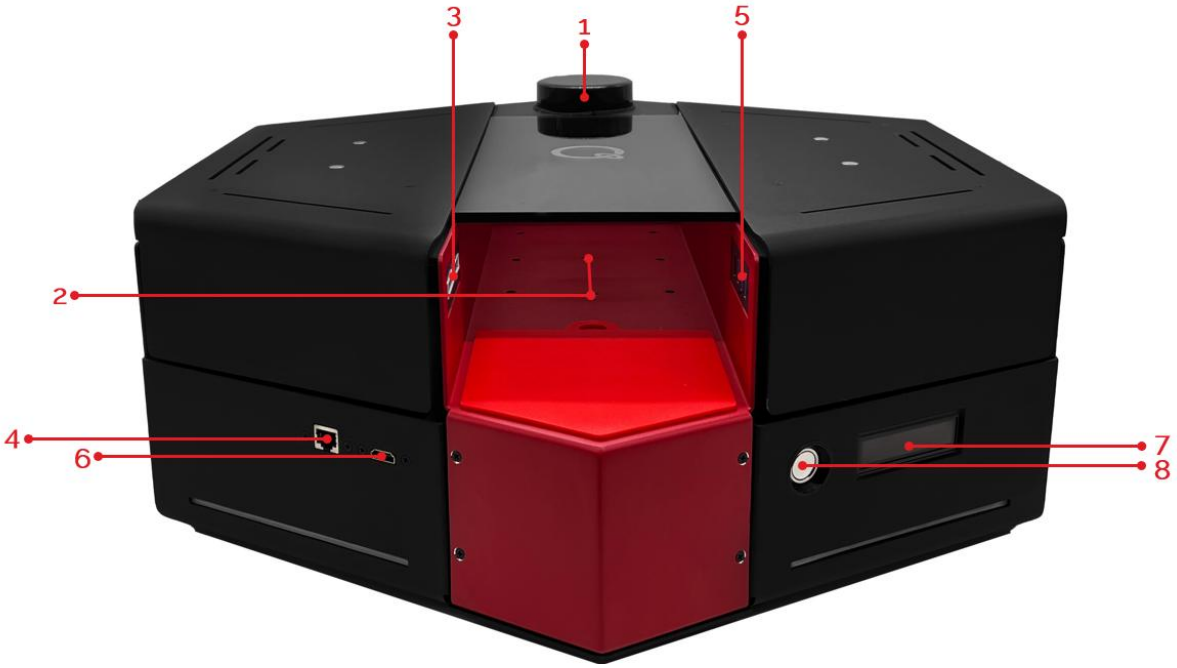


Figure 1: Back view

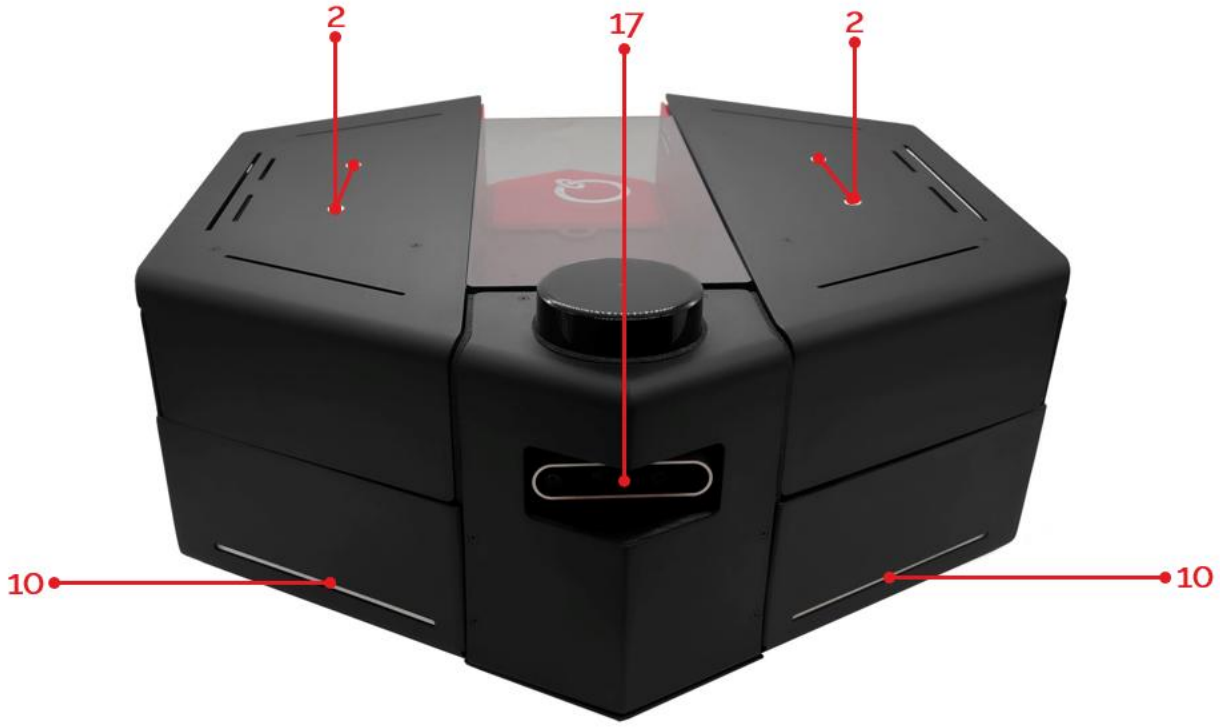


Figure 2: Front view

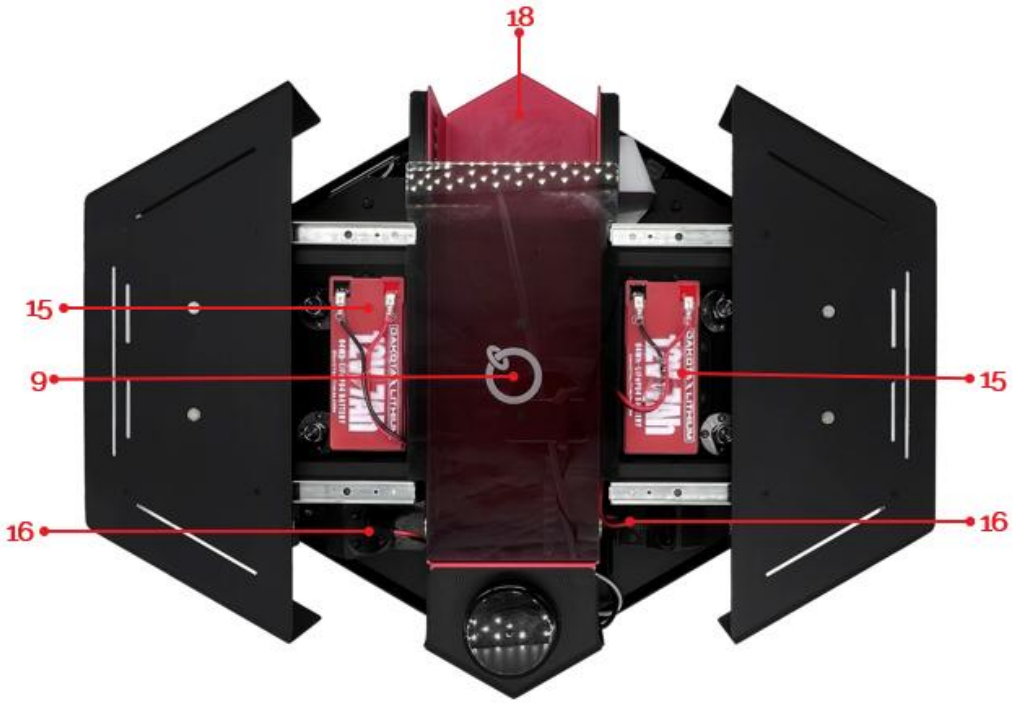


Figure 3: Top view

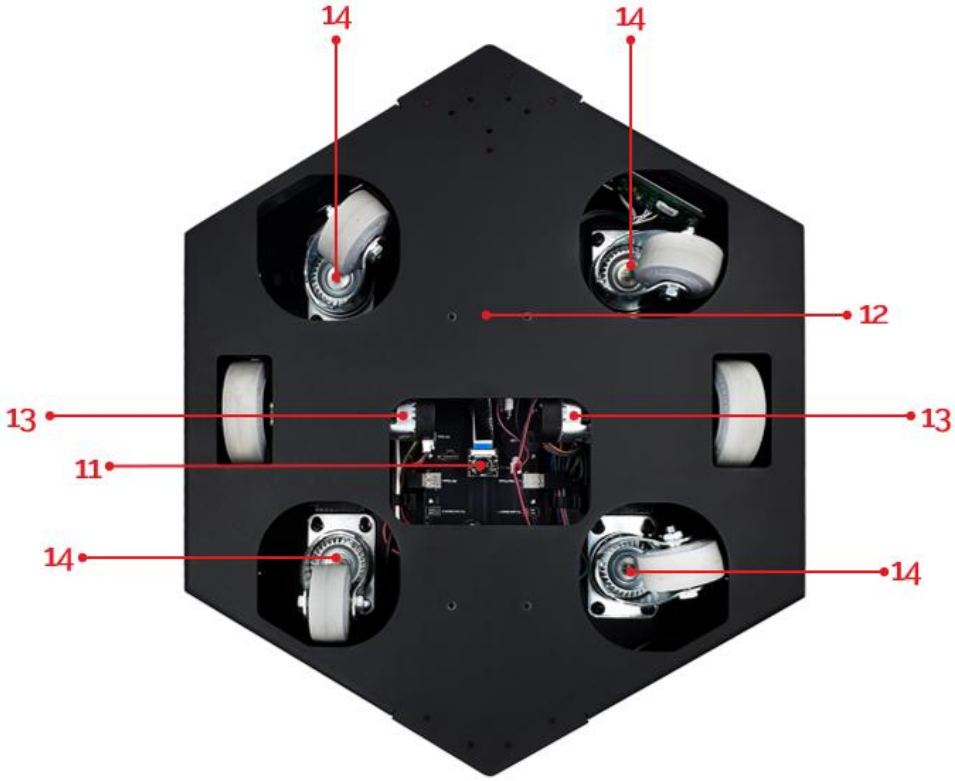


Figure 4: Bottom view

## i. Embedded Computer

The QBot Platform is powered by an onboard Raspberry Pi 4 with 4GB RAM. More information on this board can be found here.

Figure 5. Raspberry Pi4 – 4GB

The board includes a 64-bit quad-core processor, dual-display output via two micro-HDMI ports, dual-band 2.4/5.0 GHz wireless LAN, Bluetooth 5.0, Gigabit Ethernet, USB 3.0, and PoE capability. Two heat sinks and a Raspberry Pi Fan are attached to keep the onboard computer cool during processing. The 40-pin GPIO header allows for attachment pins for a wide range of uses. For quick reference, type **pinout** in the terminal on the Raspberry Pi. On the QBot Platform, HDMI 0, the ethernet and the GPIO pins have been exposed to the surface. See section A.ix. for more details.

**Note**: In figure 7, the top left pin is pin #1

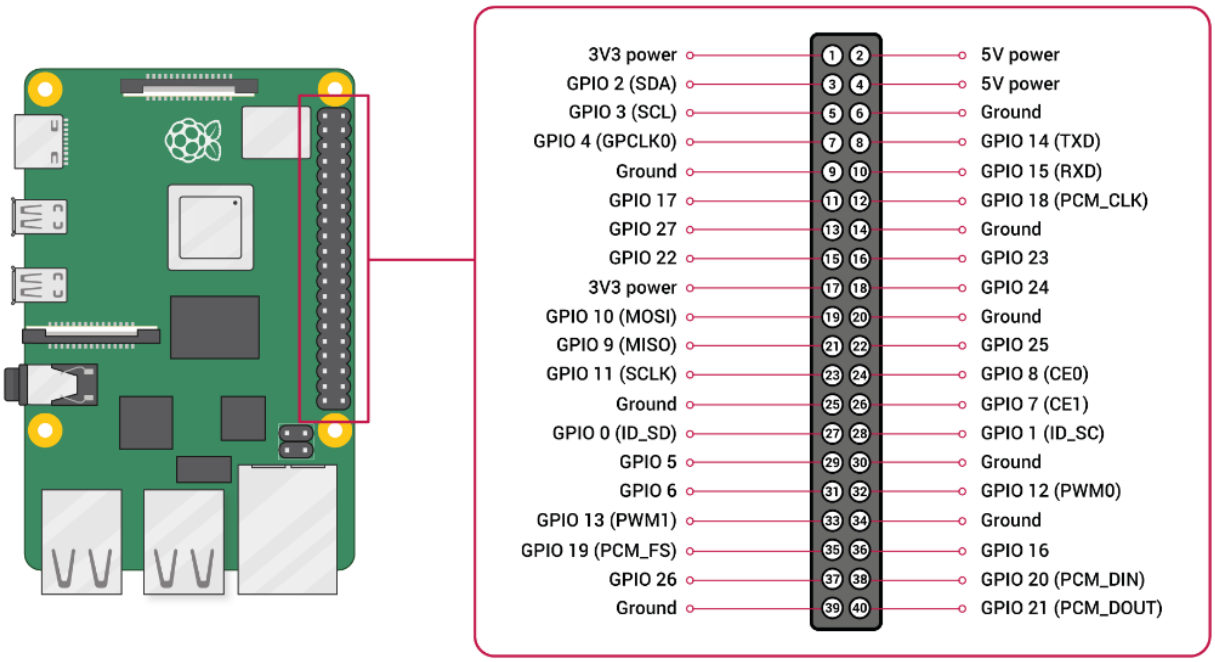


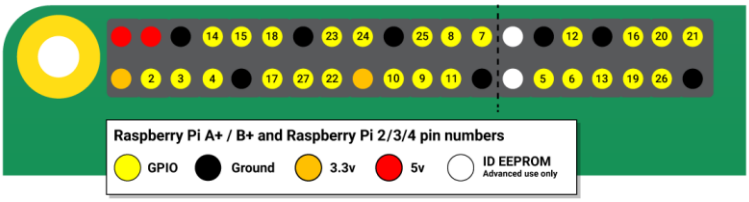


Figure 6: Pin Configuration

Photos from https://www.raspberrypi.com/documentation/computers/raspberry-pi.html

Figure 7. Exposed Pins from Embedded Computer

## ii. LiDAR

The QBot Platform comes equipped with a Leishen LiDAR M10P as shown below. This 2D planar LiDAR supports up to 20000 samples per second, with scanning frequency of up to 12Hz (i.e., 12 revolution scan per second), and has a sensing range of up to 10m. The scanning frame rate and corresponding samples per revolution are summarized in Table 2 below. More information on this LiDAR can be found in the attached datasheets. The LiDAR is Class I and eye-safe, with a wavelength of 905nm. The recommended operation parameters have been shown in Table 2.

Figure 8. Leishen LiDAR M10P

| Frequency (Hz) | Samples per revolution | Angular Resolution (degrees) |
|---|---|---|
| 10 Hz | 1680 | 0.214° |

Table 2. Achievable frame rates and samples per revolution for the Leishen LiDAR M10P

This LiDAR uses a 6-pin serial connector, that is connected to the Raspberry Pi via an OTS USB-to-serial connector.

## iii. Intel RealSense D435 Camera

The QBot Platform comes equipped with an Intel RealSense D435 RGB-D camera. It includes an IR projector and two IR imagers, making this unit a stereo tracking solution. The camera can provide RGB, Infrared (left and right) and depth streams of data at frame rates and resolutions summarized in Table 3, as well as at fields of view (FOV) in Table 4. More information can be found here.

Figure 9. Intel RealSense D435 RGBD camera

| Camera | Horizontal | Vertical | Diagonal |
|---|---|---|---|
| RGB | 69.4° ± 3° | 42.5° ± 3° | 77° ± 3° |
| Depth | 87° ± 3° | 58° ± 1° | 95° ± 3° |

Table 3: Field of Views (FOV)

| RGB | | Infrared | | Depth | |
|---|---|---|---|---|---|
| Resolution | Max. Frame Rate | Resolution | Max. Frame Rate | Resolution | Max. Frame Rate |
| 640 x 480 | 30 | 640 x 480 | 30 | 640 x 360 | 30 |

Table 4: Intel RealSense resolutions and frame rates

**Note**: The camera supports higher resolutions, however, they are not performant on the Raspberry Pi.

### iv. Downward Facing Global Shutter CSI Camera

The QBot Platform provides a grayscale global-shutter CSI camera (Figure 5a) underneath the robot at a slight offset towards the front of the robot for line following. The camera has a lens providing up to 118˚ Horizontal-FOV and 91˚ Vertical-FOV.

Figure 10: Downward Facing CSI camera

These cameras are indexed in Simulink and Python using the camera IDs as presented in Table 5. The frame resolutions, frame rates and corresponding FOV are documented in Table 6.

| Camera | ID |
|---|---|
| Downward Facing | 6 |

Table 5. Camera indexing IDs

| Resolution | Max Frame Rate (FPS) | Horizontal FOV | Vertical FOV |
|---|---|---|---|
| 640 x 400 | 30 Hz | 118˚ | 91˚ |

Table 6. Achievable frame rates and FOVs for CSI camera

**Note**: The camera supports higher resolutions however, they are not performant on the Raspberry Pi.

### v. Extrinsic Matrices of QBot Sensors

The extrinsic matrices of the RealSense camera, downward facing CSI camera and the lidar are listed below. The intrinsic matrices have not been provided, as they vary with resolution. Each extrinsic matrix transforms a 3D world coordinate expressed in the body frame $\{B\}$, into a 3D world coordinate expressed in the camera frame of reference $\{C\}$.

Facing any camera, the $z$ axis of the camera points straight outwards towards you, the $x$ axis points towards the left, and the $y$ axis points downwards, as shown in Figure 6a. Note that this is a right-handed reference frame.

The origin of the QBot Platform body frame is located at the center of the axis connecting the two drive wheels. The QBot Platform body frame's $x$ axis points towards the RealSense camera and lidar, the $z$ axis points upwards, and the $y$ axis points towards the left side of the QBot Platform, as shown in Figure 6b.

The reference frames of the LiDAR and IMU align with the QBot Platform and therefore both result in an identity rotation matrix. Note that the LiDAR's default output for angular ranges is provided in a clockwise ordering and a negative gain can be used to align the sensor readings to the LiDAR frame of reference. A post gain bias of $\pi/2$ rad to the headings will align a $0$ rad reading to the front of the QBot Platform.

$$ {}^{C}T_{B_{realsense}} = \begin{bmatrix} 0 & -1 & 0 & 0.036 \\ 0 & 0 & -1 & 0.082 \\ 1 & 0 & 0 & -0.250 \\ 0 & 0 & 0 & 1 \end{bmatrix} \qquad {}^{Lidar}T_{B} = \begin{bmatrix} 1 & 0 & 0 & 0.22144 \\ 0 & 1 & 0 & 0 \\ 0 & 0 & 1 & -0.15639 \\ 0 & 0 & 0 & 1 \end{bmatrix} $$

$$ {}^{C}T_{B_{downward}} = \begin{bmatrix} 0 & -1 & 0 & 0 \\ -1 & 0 & 0 & -0.0083 \\ 0 & 0 & -1 & 0.040 \\ 0 & 0 & 0 & 1 \end{bmatrix} \qquad {}^{S}T_{B_{IMU}} = \begin{bmatrix} 1 & 0 & 0 & 0 \\ 0 & 1 & 0 & 0 \\ 0 & 0 & 1 & -0.63900 \\ 0 & 0 & 0 & 1 \end{bmatrix} $$

a. Camera frame $\{C\}$ b. Body frame $\{B\}$

Figure 11. Camera and body reference frames used in the extrinsic matrices

As an example, a point $x$ located on the floor 1m ahead of the QBot Platform is expressed in body frame as

$$ {}^{B}x = \begin{bmatrix} 1 & 0 & 0 \end{bmatrix}^{T} $$

This point can be expressed in the RealSense camera's coordinates ${}^{C}x$ as,

$$ {}^{C}x = {}^{C}T_{B_{realsense}} \begin{bmatrix} {}^{B}x \\ 1 \end{bmatrix} = \left[ \begin{bmatrix} 0 & -1 & 0 & 0.036 \\ 0 & 0 & -1 & 0.082 \\ 1 & 0 & 0 & -0.250 \\ 0 & 0 & 0 & 1 \end{bmatrix} \right] \begin{bmatrix} 1 \\ 0 \\ 0 \\ 1 \end{bmatrix} = \begin{bmatrix} 0.036 \\ 0.082 \\ 0.750 \\ 1 \end{bmatrix} $$

The point is then ${}^{C}x = [0.036 \quad 0.082 \quad 0.750]^T$ which intuitively makes sense since the camera would be closer to the point in front of the QBot Platform (smaller x then 1).

## v. Drivetrain

The QBot Platform comes equipped with two motors. The motor parameters are listed in Table 7. There is firmware level protection implemented for Stall as well as Overcurrent.

If the PWM duty cycle commands are greater than 10% (0.1) and the motor velocity is under 43 counts/sec (approximately $\pi/4$ rad/s), then a stall warning will be issued in the digital channels through the HIL driver. If the stall warning is consistently held for 5 seconds, a **Stall** error is triggered and both motor PWMs are disabled for safety. Ensure that the QBot Platform is not stuck behind any obstacles and can move freely. As such, any examples supplied with the QBot Platform do not move the robot at speeds under $\pi/4$ rad/s per wheel. This corresponds to an approximate body forward velocity of 3 cm/s and a body turn velocity of $\pi/20$ rad/s.

Onboard overcurrent protection from the FPGA will ensure that either motor enters an **Overcurrent** state if the following conditions are met,

1. current draw of 4 Amps continuously for 6 seconds
2. current draw of 6 Amps continuously for 4 seconds
3. current draw of 8 Amps continuously for 3 seconds
4. current draw of 10 Amps continuously for 2.4 seconds
5. current draw of 12 Amps continuously for 2 seconds

Once in the **Overcurrent** state, the LCD will show an '`Motor error: OVERCURRENT`' message and both motors PWMs are disabled for safety. Ensure that the QBot Platform can freely move. To revert to normal operation, the HIL device must be closed and opened again, which is most easily achieved by restarting the script/executable.

| Symbol | Description | Value |
|---|---|---|
| $R_m$ | Terminal resistance | 0.923 Ω |
| $k_t$ | Torque constant | 0.1397 Nm / A |
| $k_m$ | Motor back-emf constant | 0.1397 V/(rad/s) |
| $\tau$ | Motor time-constant | 0.57 s |
| $J_{eq}$ | Net Load Per Motor | 0.012 kg m^2 |
| $\tau_{F,K}$ | Kinetic Friction Torque | 0.05 Nm |
| $\tau_{F,S}$ | Static Friction Torque | 0.9 Nm |

Table 7: Drive motor parameters – the last four parameters are derived experimentally and are affected by body dynamics.

The motors accept commands from duty cycle commands (-1 to 1) based on the battery voltage. Similar motor commands will apply lower motor voltages as the battery decays.

## Encoder

The QBot Platform includes two encoders used to measure the angular position of each drive motor. The encoders provide 85 counts per revolution or 340 counts per revolution in quadrature mode.

An encoder speed measurement is also available (also called a Tach). This is based on the time between encoder edges, and is considered a 'hardware velocity', available in counts/s through the Other channels in the HIL Read API.

The motor and encoder's datasheet can be found in the supplementary manuals attached here.

## vi. Battery

The QBot Platform uses a 12V 7Ah battery (84Wh) LiFePO4 battery (Figure 7a). More information on the provided battery is summarized in Table 8. The battery can be charged using the provided Optimate lithium battery charger (Figure 7b). Under-voltage protection ensures that the QBot Platform automatically shuts down when the batteries voltages drop below 11.5V. If the batteries voltages drop below 12.2V, a 'LOW BAT' warning message is displayed on the LCD. For more information, see the User Manual - Power document.

a. 12V 7Ah 84Wh LiFePO4 battery

b. Optimate lithium battery charger

Figure 12. LiFeP04 battery and charger provided with the QBot Platform

| # | Item | Value |
|---|---|---|
| 1 | Battery capacity | $7\ Ah$ |
| 2 | Max continuous discharge | $10\ A$ |
| 3 | Instantaneous discharge | $50\ A\ @\ 300ms\ pulse$ |
| 4 | Connector on battery side | $SAE$ |
| 5 | Maximum charge voltage (recommended) | $14.4\ V$ |
| 6 | Nominal voltage | $12.8\ -\ 13.4\ V$ |
| 7 | Minimum voltage (max/recommended) | $9.0\ /\ 11.0\ V$ |
| 8 | Battery weight | $907.18\ grams$ |
| 9 | Battery dimensions (LxWxH) | $15.1\ cm\ x\ 6.5\ cm\ x\ 9.5\ cm$ |

Table 8. LiFeP04 battery characteristics

We have included a firmware limit for the battery to protect the robot and battery for long term use.

**Caution**: Before using any batteries, chargers/balancers, or power supplies, users must first read the manuals packaged with their equipment. Quanser supplies these guidelines for charging batteries, but it is the users' responsibility to ensure they are operating their equipment safely and correctly. Quanser is not responsible for any damages resulting from use of batteries, power supplies, chargers, or balancers.

**Caution**: Prior to using the QBot Platform, visually check the battery for bloating or damage. If the battery exhibits bloating **DO NOT USE** it. Visual bloating of the battery is dangerous - discard it in accordance with your country's relevant recycling and disposal laws

**Caution**: Do not charge the battery under direct sunlight.

**Caution**: Keep LiFeP04 batteries away from children and animals.

**Caution**: Never charge a LiFeP04 battery or battery charger that has been punctured or damaged in a crash. After a crash, inspect the battery or charger for signs of damage. Protect your LiFeP04 batteries from accidental damage during storage and transportation. Do not put batteries in pockets or bags can encounter sharp or metallic objects.

**Note**: If you require additional batteries, please contact Quanser. If you are using batteries not supplied by Quanser, ensure that the connection and polarity match.

**Caution**: A LiFeP04 battery left deep-discharged for an extended period may develop permanent damage in one or more cells. Such batteries may heat up excessively while charging. Always monitor battery temperature during the first hour, then hourly there-after. If at any time the battery is uncomfortably hot to touch or you notice any unusual signs, disconnect the charger immediately.

**Caution**: Do NOT attempt to disassemble, modify, or repair the LifeP04 battery.

**Note:** When discarding a LiFeP04 battery, discard it in accordance with your country's relevant recycling and disposal laws.

Current draws for various components have been listed in Table 9.

| Component | Current Draw |
|---|---|
| RealSense camera | $0.700\ A$ |
| Leishen M10P LiDAR | $0.400\ A$ |
| Downward camera | $0.150\ A$ |
| LEDs (per channel per side, e.g. x6 multiplier for white) | $0.165\ A$ |
| Electronics current | $0.500\ A$ |
| Both motors running at nominal speeds 0.7 m/s | $1.410\ A$ |

Table 9. Current draws for various components of the QBot Platform

For example, if both the LEDs are set to red ($0.33\ A$) and the robot is driving continuously while streaming both cameras and the LiDAR, the total current draw should be $3.50\ A$, which yields an estimate operation time of $2\ hrs$ for a $7Ah$ battery per battery.

## vii. IMU

The QBot Platform includes a 6-axis IMU. There is a 16-bit accelerometer and gyroscope. The spec sheet for the part is attached here.

## viii. Dimensions

The QBot Platform dimensions have been summarized in Table 10. The wheelbase is shown in Figure 13.

| Index | Item | Value |
|---|---|---|
| 1 | Length | $0.575\ m$ |
| 2 | Width | $0.500\ m$ |
| 3 | Height (with lidar) | $0.215\ m$ |
| 4 | Wheelbase Width (tire center to center) | $0.390\ m$ |
| 5 | Tire diameter | $0.0889\ m$ |

Table 10. QBot Platform dimensions

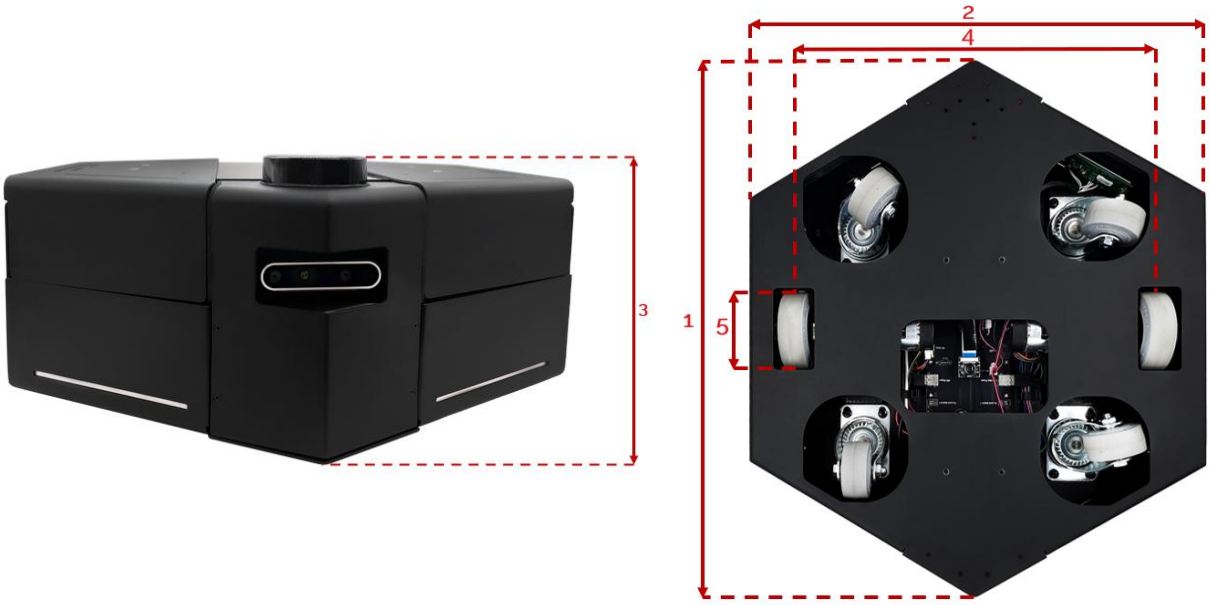


Figure 13. QBot Dimensions

## ix. Peripherals

The QBot Platform features accessible ports, including HDMI and Ethernet, the 40-pin GPIO interface from the embedded computer, and a powered USB hub for additional peripheral connections. The top face of the QBot includes slots for convenient attachment of fiducial markers or custom solutions, while a centrally located slot hole on the side of the QBot Platform facilitates the neat routing of wires and cables.

a. Powered USB Hub

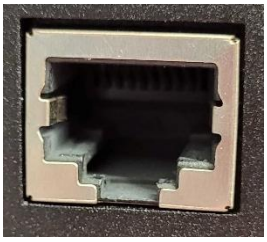

b. Ethernet Port

c. GPIO pins from Embedded Computer

d. HDMI Port

Figure 14: Designated locations on the QBot Platform intended for the attachment of peripherals.

## vi. Landing Plate

Each QBot Platform comes with its own landing plate. The landing plate can be removed or installed depending on your use. To install the landing plate simply open the wings and place down your landing plate snuggly around the rails and close the wings again. See Figure 15.

Figure 15: QBot Platform Landing Plate Installation Steps

## B. Environment Setup

Each QBot Platform Bundle comes with a set of mats and walls. These are to be used with the downward facing camera for teaching and research purposes. The recommended setup is shown in Figure 16. The QBot Platform Bundle also contains walls (see Figure 17) for setting up a perimeter around the mats in challenging environments (larger then 16 m in diameter or containing dark objects).

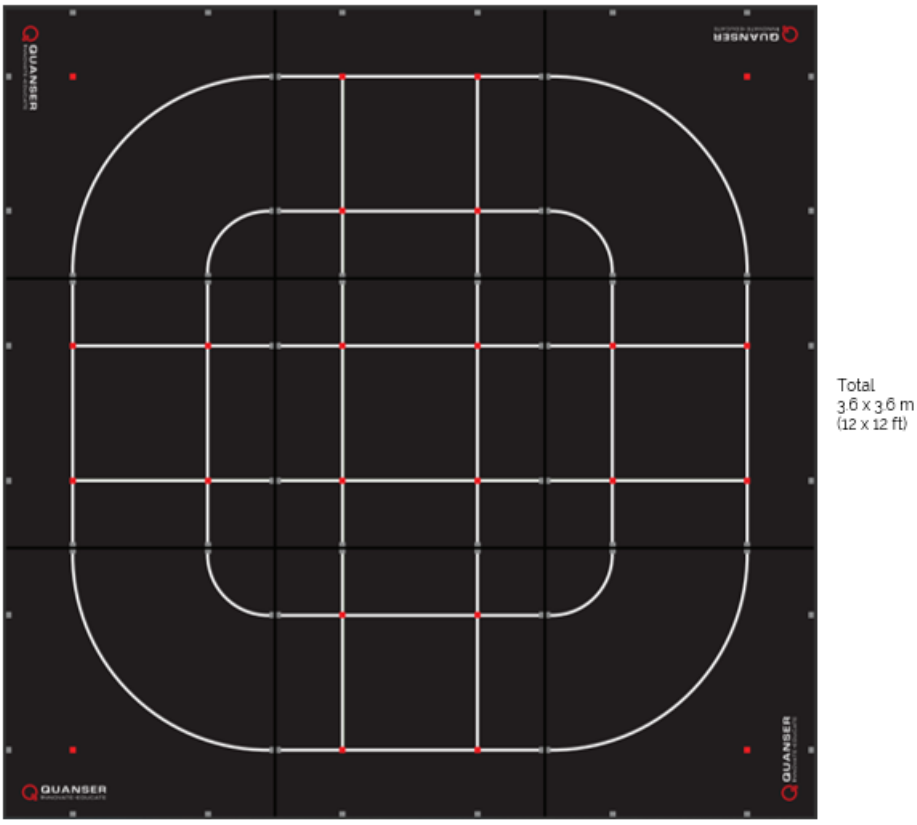


Figure 16: Recommend Mat Layout for the QBot Platform Bundle with dimensions.

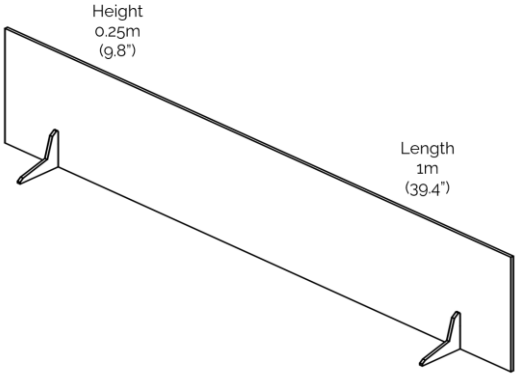


Figure 17: QBot System walls with dimensions

In case you have not acquired the QBot Platform Bundle, each QBot Platform comes with a testing mat.  This mat is to be used as a guideline for building your own setup.

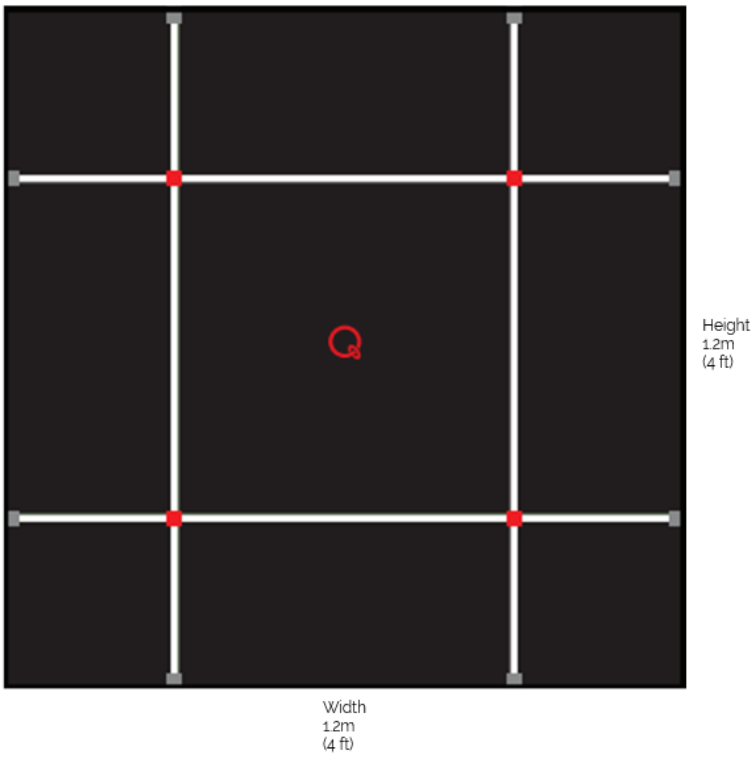


Figure 18: Testing Mat

## C. Electrical Considerations

| | |
|---|---|
| ESD warning | The QBot Platform internal components are sensitive to electrostatic discharge. Before handling the QBot Platform, ensure that you have been properly grounded. |
| Caution | Maximum recommended total current draw from the power pins on user header from the embedded computer are:<br>- 2 A for 5V<br>- 500 mA for 3.3V |
| Caution | The QBot Platform has a max payload of 50 kg. Do not sit or stand on the robot. |
| Caution | The QBot Platform is not waterproof. |

© Quanser Inc. All rights reserved.

QUANSER
INNOVATE · EDUCATE

Solutions for teaching and research. Made in Canada.