QUANSER
INNOVATE·EDUCATE

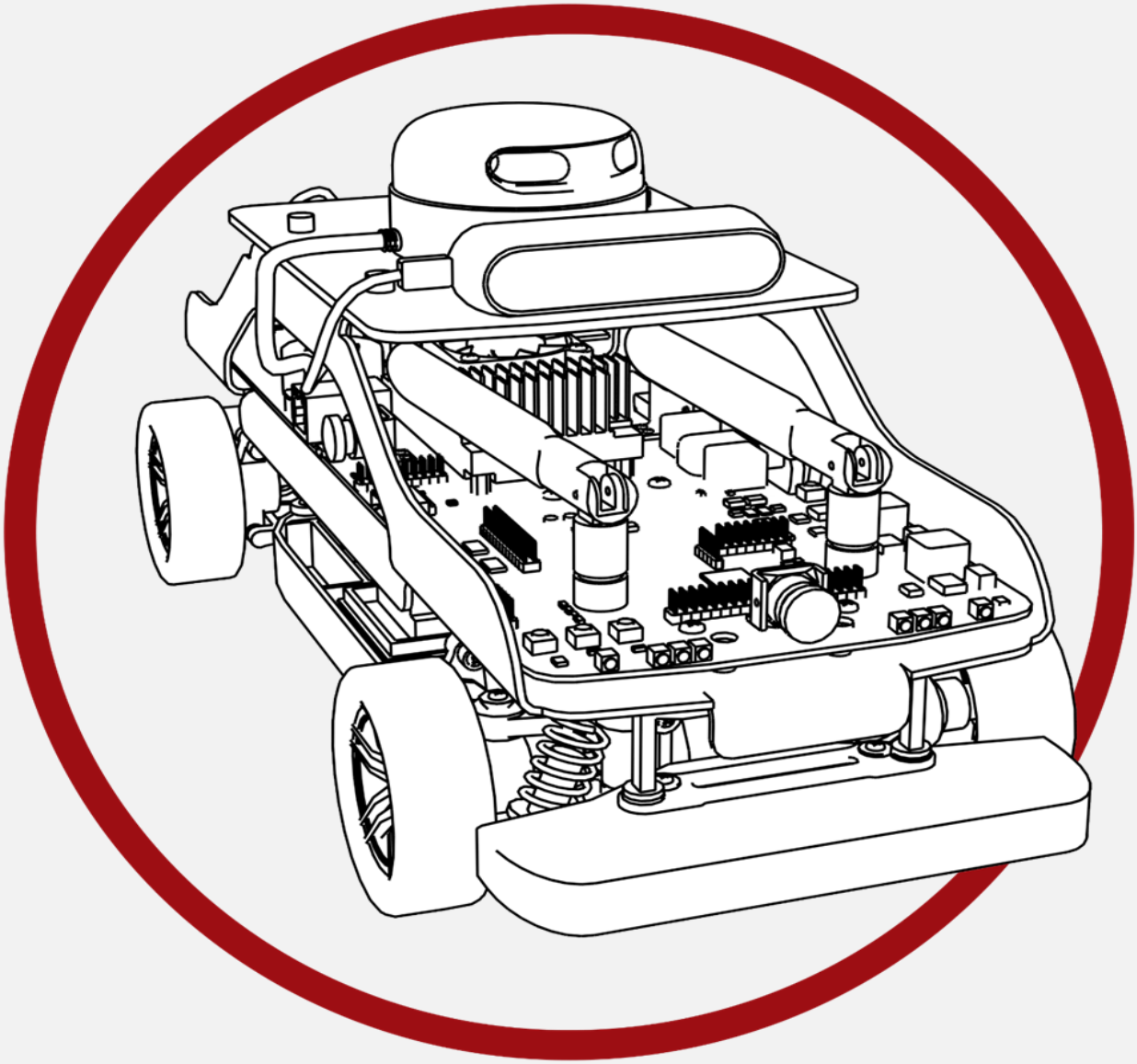

QCar

System Hardware User Manual

v 1.0 – 9th Jan 2023

© 2023 Quanser Inc., All rights reserved

For more information on the solutions Quanser Inc. offers, please visit the web site at: http://www.quanser.com

Quanser Inc.
119 Spy Court
Markham, Ontario
L3R 5H6, Canada

info@quanser.com
Phone : 19059403575
Fax : 19059403576
printed in Markham, Ontario.

This document and the software described in it are provided subject to a license agreement. Neither the software nor this document may be used or copied except as specified under the terms of that license agreement. Quanser Inc. grants the following rights: a) The right to reproduce the work, to incorporate the work into one or more collections, and to reproduce the work as incorporated in the collections, b) to create and reproduce adaptations provided reasonable steps are taken to clearly identify the changes that were made to the original work, c) to distribute and publicly perform the work including as incorporated in collections, and d) to distribute and publicly perform adaptations. The above rights may be exercised in all media and formats whether now known or hereafter devised. These rights are granted subject to and limited by the following restrictions: a) You may not exercise any of the rights granted to You in above in any manner that is primarily intended for or directed toward commercial advantage or private monetary compensation, and b) You must keep intact all copyright notices for the Work and provide the name Quanser Inc. for attribution. These restrictions may not be waved without express prior written permission of Quanser Inc.

FCC Notice This device complies with Part 15 of the FCC rules. Operation is subject to the following two conditions: (1) this device may not cause harmful interference, and (2) this device must accept any interference received, including interference that may cause undesired operation.

Industry Canada Notice This Class A digital apparatus complies with Canadian ICES-003. Cet appareil numérique de la classe A est conforme à la norme NMB-003 du Canada.

Waste Electrical and Electronic Equipment (WEEE)

This symbol indicates that waste products must be disposed of separately from municipal household waste, according to Directive 2002/96/EC of the European Parliament and the Council on waste electrical and electronic equipment (WEEE). All products at the end of their life cycle must be sent to a WEEE collection and recycling center. Proper WEEE disposal reduces the environmental impact and the risk to human health due to potentially hazardous substances used in such equipment. Your cooperation in proper WEEE disposal will contribute to the effective usage of natural resources.

CE Compliance CE

This product meets the essential requirements of applicable European Directives as follows:

- 2006/95/EC; Low-Voltage Directive (safety)
- 2004/108/EC; Electromagnetic Compatibility Directive (EMC)

Warning: This is a Class A product. In a domestic environment this product may cause radio interference, in which case the user may be required to take adequate measures.

Caution

This equipment is designed to be used for educational and research purposes and is not intended for use by the public. The user is responsible to ensure that the equipment will be used by technically qualified personnel only. While the end-effector board provides connections for external user devices, users are responsible for certifying any modifications or additions they make to the default configuration.

Table of Contents

A. Hardware Components 3

i. NVIDIA JETSON TX2 4

ii. LiDAR 5

iii. Intel RealSense D435 Camera 6

iv. 360˚ CSI Camera Suite 7

v. Drive Motor and Steering Servo 9

vi. Encoder 10

vii. Battery 11

viii. IMU 15

ix. Dimensions 15

x. PCB and integrated Data Acquisition (DAQ) 16

B. Environmental 20

C. Electrical Considerations 20

A. Hardware Components

The main QCar components are listed in Table 1. These components are ID marked in Figure 1, which presents the front, rear, left and right views of the QCar platform.

ID	Component	ID	Component
1	RPLiDAR A2	12	Front bumper
2	Intel RealSense RGBD camera	13	Rear bumper
3	Front CSI camera	14	Front headlamps and indicators
4	Right CSI camera	15	Rear brake lights and indicators
5	Rear CSI camera	16	Expandable I/O
6	Left CSI camera	17	NVIDIA Jetson TX2
7	WiFi 802.11 a/b/g/n/ac with dual antennas	18	Drive motor
8	10/100/1000 Base-T Ethernet jack	19	720 count pre-gearing motor encoder
9	Dual HDMI connectors	20	Steering servo motor
10	XT-60 battery connector	21	Speaker
11	LiPo battery compartment	22	LCD display

Table 1. QCar Platform Components

ESD Warning

The QCar internal components are sensitive to electrostatic discharge. Before handling the QCar, ensure that you have been properly grounded.

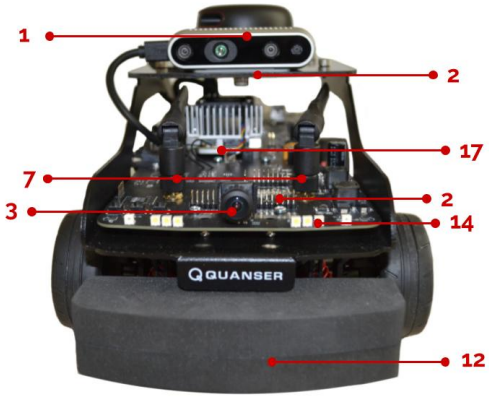

a. Front view

b. Rear view

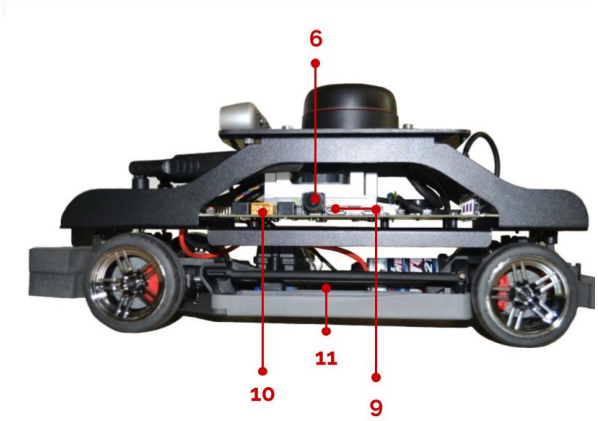

c. Left view

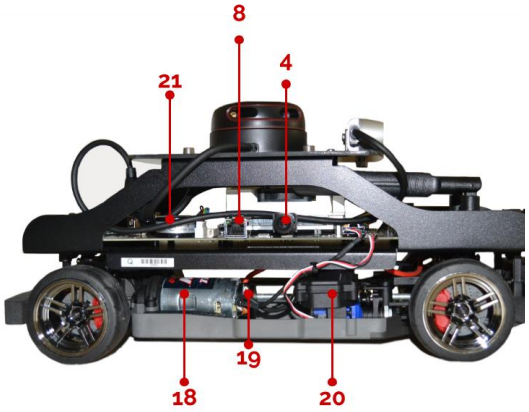

d. Right view

Figure 1. QCar Platform Components

i. NVIDIA JETSON TX2

The QCar is powered by an onboard NVIDIA Jetson TX2 with 256 Cuda Cores and an NVIDIA Pascal GPU architecture. It also features a Dual-Core NVIDIA Denver 2 64-Bit CPU along with a Quad-Core ARM® Cortex®-A57 MPCore CPU. More information on this board can be found here.

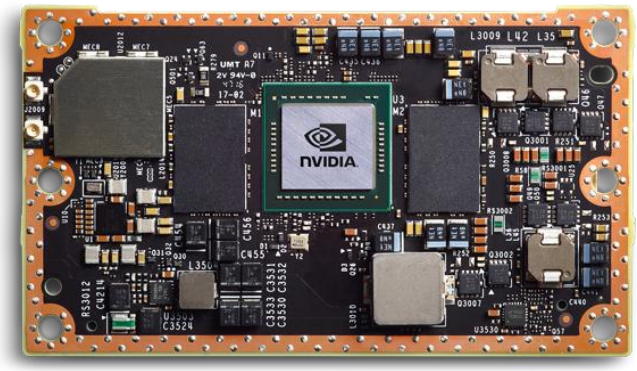

Figure 2. NIVIDIA Jetson TX2 Processor

The board includes 32 GB of storage via an eMMC and 8 GB of 128-bit LPDDR4 1866 MHz 59.7 GB/s memory. A USB flash stick can be used for additional storage using the USB ports.

ii. LiDAR

The QCar platform comes equipped with an RPLiDAR A2 (A2M8) as shown below. This 2D planar LiDAR supports up to 8000 samples per second, with scanning frequency of up to 15Hz (i.e., 15 revolution scan per second), and has a sensing range of up to 18m. The model rate and corresponding samples per second are summarized in Table 2 below. More information on this LiDAR can be found here. The LiDAR is Class I and eye-safe, with a wavelength of 785nm.

Figure 3. RP-LiDAR A2

Frequency (Hz)	Samples per revolution	Angular Resolution (degrees)
10 Hz	4000	0.45°
15 Hz	6000	0.45°
20 Hz	8000	0.45°

Table 2. Achievable frame rates and samples per revolution for the RPLiDAR A2

This LiDAR uses a 5-pin serial connector, connected to the J17 port on the QCar's DAQ card. **NOTE**: The 7-pin serial port J24 can also be used for other LiDARs such as the RPLiDAR A1, although only one of the J17 or J24 ports can be used at any given time. For simultaneous use of LiDARs, consider using a USB based solution with one of the 4 USB 3,0 ports on the QCar's DAQ card.

iii. Intel RealSense D435 Camera

The QCar platform comes equipped with an Intel RealSense D435 RGB-D camera. It includes an IR projector and two IR imagers, making this unit a stereo tracking solution. The camera can provide RGB, Infrared (left and right) and depth streams of data at frame rates and resolutions summarized in Table 3, as well as at fields of view in Table 4. More information can be found here.

Figure 4. Intel RealSense D435 RGBD camera

RGB		Infrared		Depth	
Resolution	Max. Frame Rate	Resolution	Max. Frame Rate	Resolution	Max. Frame Rate
1920 x 1080	30	1280 x 800	30	1280 x 720	30
1280 x 720	30	1280 x 720	30	848 x 480	90
960 x 540	60	848 x 480	90	848 x 100	100
848 x 480	60	848 x 100	100	640 x 480	90
640 x 480	60	640 x 480	90	640 x 360	90
640 x 360	60	640 x 360	90	480 x 270	90
424 x 240	60	480 x 270	90	424 x 240	90
320 x 240	60	424 x 240	90	256 x 144	90
320 x 180	60	256 x 144	90	n/a	n/a

Table 3: Intel RealSense resolutions and frame rates

Camera	Horizontal	Vertical	Diagonal
RGB	69.4˚ ± 3˚	42.5˚ ± 3˚	77˚ ± 3˚
Depth	87˚ ± 3˚	58˚ ± 1˚	95˚ ± 3˚

Table 4. Intel RealSense D435 field of view

iv. 360˚ CSI Camera Suite

The QCar platform provides 360˚ of vision through the placement of four 8MP 2D CSI cameras (Figure 5a) at the front, left, rear and right side of the vehicle. Each camera has a wide-angle lens providing up to 160˚ Horizontal-FOV (field of view) and 120˚ Vertical-FOV. The corresponding blind-spots have been shown below in Figure 5b.

a. CSI camera

b. 360 camera coverage portraying the blind spots in white

Figure 5. CSI cameras with wide angle lenses and 360 vision via their placement.

These cameras are indexed in Simulink, Python and C/C++ using the camera IDs as presented in Table 5. The frame resolutions, frame rates and corresponding FOV are documented in Table 6.

Camera	ID	Camera	ID
Right	0	Left	2
Rear	1	Front	3

Table 5. Camera indexing IDs

Resolution	Max Frame Rate (FPS)	Horizontal FOV	Vertical FOV
3280 x 2464	21 Hz	160˚	120˚
1640 x 1232	80 Hz	160˚	120˚
820 x 616	80 Hz	160˚	120˚
1640 x 820	120 Hz	160˚	80˚
820 x 410	120 Hz	160	80˚

Table 6. Achievable frame rates for CSI cameras

The extrinsic matrices of multiple sensors, such as cameras, IMU and LiDAR, have been provided below. The intrinsic matrices have not been provided, as they vary with resolution. Each extrinsic matrix transforms a 3D world coordinate expressed in the body frame $\{B\}$, into a 3D world coordinate expressed in the sensor frame of reference $\{C\}$.

The body frame is located between the front and rear axles on the ground plane.

Facing any camera, the z axis of the camera points straight outwards, the x axis points towards the left, and the y axis points downwards, as shown in Figure 6a. The body frame's x axis points longitudinally forwards, the z axis points upwards, and the y axis points towards the left side of the vehicle, as shown in Figure 6b. As a result, the rotation matrix part of each extrinsic matrix has a determinant of -1. For virtual QCar, all distances are 10x.

Front_axle_to_body

$$\begin{bmatrix} 1 & 0 & 0 & 0.13 \\ 0 & 1 & 0 & 0 \\ 0 & 0 & 1 & 0.031 \\ 0 & 0 & 0 & 1 \end{bmatrix}$$

Rear_axle_to_body

$$\begin{bmatrix} 1 & 0 & 0 & -0.1300 \\ 0 & 1 & 0 & 0 \\ 0 & 0 & 1 & 0.0310 \\ 0 & 0 & 0 & 1 \end{bmatrix}$$

csi_front_to_body

$$\begin{bmatrix} 0 & 0 & 1 & 0.1930 \\ -1 & 0 & 0 & 0 \\ 0 & -1 & 0 & 0.0953 \\ 0 & 0 & 0 & 1 \end{bmatrix}$$

csi_left_to_body

$$\begin{bmatrix} 1 & 0 & 0 & 0.0140 \\ 0 & 0 & 1 & 0.0438 \\ 0 & -1 & 0 & 0.0953 \\ 0 & 0 & 0 & 1 \end{bmatrix}$$

csi_rear_to_body

$$\begin{bmatrix} 0 & 0 & -1 & -0.165 \\ 1 & 0 & 0 & 0 \\ 0 & -1 & 0 & 0.0953 \\ 0 & 0 & 0 & 1 \end{bmatrix}$$

csi_right_to_body

$$\begin{bmatrix} -1 & 0 & 0 & 0.0140 \\ 0 & 0 & -1 & -0.0674 \\ 0 & -1 & 0 & 0.0953 \\ 0 & 0 & 0 & 1 \end{bmatrix}$$

IMU_to_body

$$\begin{bmatrix} 1 & 0 & 0 & 0.1278 \\ 0 & 1 & 0 & 0.0223 \\ 0 & 0 & 1 & 0.0895 \\ 0 & 0 & 0 & 1 \end{bmatrix}$$

realsense_rear_to_body

$$\begin{bmatrix} 0 & 0 & 1 & 0.0822 \\ -1 & 0 & 0 & -0.0001 \\ 0 & -1 & 0 & 0.1582 \\ 0 & 0 & 0 & 1 \end{bmatrix}$$

Rplidar_to_body

$$\begin{bmatrix} 0 & -1 & 0 & -0.0108 \\ 1 & 0 & 0 & -0.0001 \\ 0 & 0 & 1 & 0.1860 \\ 0 & 0 & 0 & 1 \end{bmatrix}$$

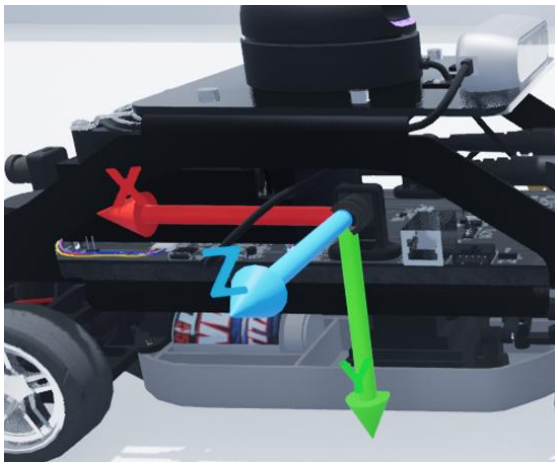

a. Camera frame $\{C\}$

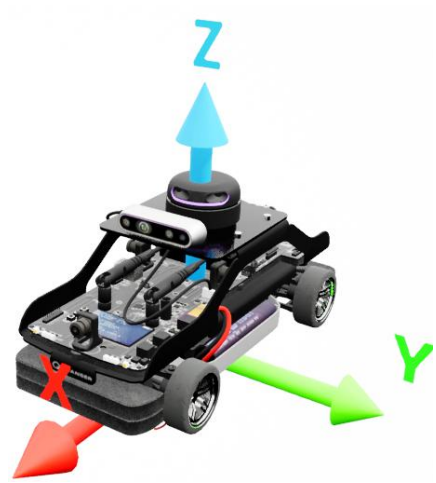

b. Body frame $\{B\}$

Figure 6. Camera and body reference frames used in the extrinsic matrices

As an example, a point A located on the floor 1m ahead of the QCar is expressed in front CSI camera frame as

$$^{C}p_{CA} = \begin{bmatrix} 0 & 0 & 1 \end{bmatrix}^T$$

This point can be expressed in the body frame coordinates as,

$$B_x = {}^{B}T_C \begin{bmatrix} ^{C}p_{CA} \\ 1 \end{bmatrix} = \begin{bmatrix} 0 & 0 & 1 & 0.193 \\ -1 & 0 & 0 & 0 \\ 0 & -1 & 0 & 0.0953 \\ 0 & 0 & 0 & 1 \end{bmatrix} \begin{bmatrix} 0 \\ 0 \\ 1 \\ 1 \end{bmatrix} = \begin{bmatrix} 1.193 \\ 0 \\ 0.0953 \\ 1 \end{bmatrix}$$

The point in body frame is then $B_x = \begin{bmatrix} 1.183 & 0 & 0.110 \end{bmatrix}^T$.

v. Drive Motor and Steering Servo

The QCar comes equipped with a motor that has an integrated cooling fan. The motor parameters are listed in Table 7. The motor can be set to a **Neutral** mode by setting the Digital I/O pin 40 on the DAQ to high (1), in which case it will coast/freewheel and will not be drivable. By default, this pin is set to low (0). Onboard overcurrent protection from the FPGA will ensure that the motor enters an **Overcurrent** state if the following conditions are met,

1. current draw of 5 Amps continuously for 8 seconds
2. current draw of 10 Amps continuously for 2 seconds
3. current draw of 15 Amps continuously for 0.5 seconds

Once in the **Overcurrent** state, the LCD will show an 'Overcurrent' message and the motor will enter the **Neutral** mode. To revert to normal operation, the HIL device must be closed and opened again, which is most easily achieved by restarting the application (script/executable).

⚠ Caution: Holding the motor in a stalled position for a prolonged period at applied voltages of over 5V can result in permanent damage.

Symbol	Description	Value
R_m	Terminal resistance	0.470 Ω
k_t	Torque constant	0.0027 N-m/A
k_m	Motor back-emf constant	0.0027 V/(rad/s)
τ	Steering time-constant	0.16 s

Table 7: QCar drive motor parameters

The steering servo accepts commands in the range of -0.5 to 0.5 radians. Its time constant is presented in Table 7.

vi. Encoder

The QCar platform includes a pre-gearing encoder used to measure the angular position of the drive motor. This US Digital E8T-720-125 single-ended optical shaft encoder provides 720 counts per revolution or 2880 counts per revolution in quadrature mode. The encoder's datasheet can be found included.

The drive motor pinion is connected to the differential drive via gears with a reduction of 13/70 and the differential drive is connected to the wheels via gears with a reduction of 19/37.

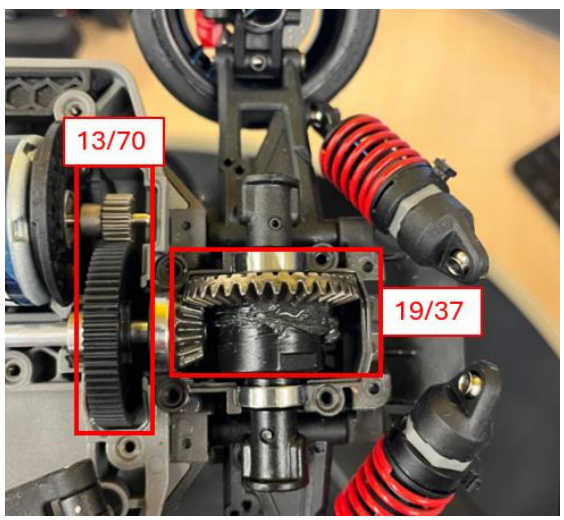

Gear reduction from drive motor to wheels

With this gear ratio, a wheel radius of 0.033 and 720 counts per revolution set to quadrature mode, the conversion from encoder counts to meters, or counts/s to m/s, is the following:

$$distance(m) = encoderCounts * (\frac{1}{CountsPerRev * 4}) * pinToSpurRatio * 2\pi * radius$$

$$distance(m) = encoderCounts * (\frac{1}{720 * 4}) * (13 * 19) \ / \ (70 * 37) * 2\pi * 0.033$$

$$distance(m) = encoderCounts * (\frac{1}{2880}) * 0.01977$$

An encoder speed measurement is also available. This is based on the time between encoder edges, and is considered a 'hardware velocity', available in counts/s through the **Other** channels in the HIL API.

vii. Battery

The QCar platform uses a 3S (3-cell 11.1 Volts) 3300 mAh capacity lithium polymer (LiPo) battery (Figure 7a) with a female XT-60 connector. More information on the provided battery is summarized in Table 8. The battery can be charged using the provided EV-Peak E4 charger (Figure 7b). Under-voltage protection ensures that the QCar automatically shuts down when the battery voltage drops below 10.0V. If the battery voltage drops below 10.5V, a 'LOW BAT' warning message is displayed on the LCD. For more information, see the User Manual - Power document.

a. LiPo 3s 3300mAh with balancer cable (4 wire connector) and XT60 female connector

b. EV-Peak E4 charger

Figure 7. LiPo battery and charger provided with the QCar

#	Item	Value
1	Cells	3S (3 cells in series)
2	Battery capacity	3300 mAh
3	Minimum continuous discharge rating	31 C
4	Connector on battery side	XT60 (Female)

5	Maximum voltage per cell	4.2 V
6	Nominal voltage per cell	3.7 V
7	Minimum voltage per cell	3.5 V
8	Battery weight	230 grams
9	Battery dimensions (LxWxH)	135 mm x 44 mm x 17 mm

Table 8. LiPo battery characteristics

LiPo Battery Safety

Caution: Before using any batteries, chargers/balancers, or power supplies, users must first read the manuals packaged with their equipment. Quanser supplies these guidelines for charging batteries, but it is the users' responsibility to ensure they are operating their equipment safely and correctly. Quanser is not responsible for any damages resulting from use of batteries, power supplies, chargers, or balancers.

Caution: Charge and store LiPo batteries in a location where a battery fire or explosion (including smoke hazard) will not endanger life or property. Do not charge LiPo batteries near flammable materials, liquids or objects.

Caution: Prior to using the QCar 2, visually check the battery for bloating or damage. If the battery exhibits bloating **DO NOT USE** it. Visual bloating of the battery is dangerous - discard it in accordance with your country's relevant recycling and disposal laws.

Caution: A battery voltage below 10V increases the risk of uneven charge between the three cells. If you experience issues charging a battery that is consistently below 10V, discard it in accordance with your country's relevant recycling and disposal laws

Note: Use and store batteries in a dry environment.

Caution: Do not charge the battery under direct sunlight.

Caution: Do not charge the battery when the battery feels hot. If it does, you should place it in a metal container and observe signs of swelling or heating for at least 30

minutes.

Ensure that the metal container doesn't short the leads of the battery, which may cause a fire!

Caution: If your LiPo battery is subjected to a shock (such as a crash) you should place it in a metal container and observe signs of swelling or heating for at least 30 minutes.

Ensure that the metal container doesn't short the leads of the battery, which may cause a fire!

Caution: Always be present when charging batteries and **do not leave batteries connected to the chargers or the QCar 2 overnight**.

Caution: Keep LiPo batteries away from children and animals.

Caution: Never charge a LiPo battery that has ballooned or swollen due to overcharging, undercharging or from a crash.

Caution: Never charge a LiPo battery that has been punctured or damaged in a crash. After a crash, inspect the battery pack for signs of damage. After a crash, inspect the battery pack for signs of damage.

Caution: Protect your LiPo batteries from accidental damage during storage and transportation. Do not put battery packs in pockets or bags where they can short circuit or can come into contact with sharp or metallic objects.

Note: If you require additional batteries, please contact Quanser. If you are using batteries not supplied by Quanser, ensure that the connection and polarity match.

Caution: Never charge the LiPo battery in a moving vehicle.

Caution: Never overcharge the LiPo battery.

Caution: Never leave the LiPo battery unattended during recharging.

Caution: Do not charge LiPo batteries near flammable materials, liquids or objects.

Caution: Ensure that charging leads are connected correctly. Reversing polarity charging can lead to battery damage, fire or explosion.

Caution: A LiPo battery fire is a chemical fire. Have a suitable fire extinguisher (class D/for electrical fires) or a large bucket of dry sand near the charging area. Do not try to extinguish electrical battery fires with water.

Caution: Reduce risks from fire/explosion by storing and charging LiPo batteries inside a suitable container: a LiPo storage sack/bag or metal/ceramic container is advised.

Caution: Do NOT attempt to disassemble, modify, or repair the LiPo battery.

Caution: Never use a battery that is warm from charging or charge a battery that is warm from usage.

Note: Consider how you would deal with a LiPo battery fire/explosion as part of your normal fire safety and evacuation planning.

Note: When discarding a LiPo battery, discard it in accordance with your country's relevant recycling and disposal laws.

Note: Monitor charging LiPo batteries for signs of overheating.

The battery's performance has been summarized in Table 9 below.

Condition	Battery Life	Distance Driven
No motor, no model running (minimum power draw)	3 hr 35 min	n/a
No motor, with LIDAR/LEDs/CSIs/D435 all streaming	2 hr 11 min	n/a
Motor running, everything else off	1 hr	5 km
Motor running, with LIDAR/LEDs/CSIs/D435 all streaming	35 min	3 km

Table 9. Battery performance depending on driving conditions/modes

viii. IMU

The platform includes a 9-axis IMU. The specifications are summarized in Table 10 below and all data is provided in the body frame shown in Figure 6b.

Sensor	Description
Accelerometer	16-bit with configuration range ±2g to ±16g
Gyroscope	Configurable range from ±125 ˚/s to ±2000 ˚/s
Magnetometer	Resolution of 0.3 μT/LSB

Table 10. IMU specifications on the QCar

ix. Dimensions

The QCar is based on a 1/10th scale platform (i.e., Traxxas 4-Tec 2.0). Its dimensions have been summarized in 11. The wheelbase and track are shown in Figure 8.

Item	Value
Length	0.425 m
Width	0.192 m
Height	0.182 m
Wheelbase (Fig. 8 #1)	0.256 m
Front and rear Track (Fig. 8 #2, #3)	0.170 m

Maximum steering angle	±30˚ (0.5236 radians)
Tire diameter	0.066 m

Table 11. QCar dimensions

Figure 8. QCar wheelbase and track

x. PCB and integrated Data Acquisition (DAQ)

The QCar PCB is equipped with a wide array of components to support expanded I/O capabilities. These components are summarized in Table 12 and displayed in Figure 9. These I/O include:

1. 8 PWM output channels: One PWM output channel to command the drive motor plus up to seven additional ESCs or servos. Standard PWM, RC, OneShot, Multishot and DShot are all supported. ★
2. Motor neutral control input and steering control
3. 4 unipolar user analog input channels, 12-bit, +3.3V★
4. 1 dedicated encoder connector for motor encoder plus up to four additional encoders. Hardware encoder velocities (digital tachometer) are supported.
5. 40 reconfigurable digital I/O★
6. 3 user buttons★
7. 8 LEDs (headlamps, brake lights, indicators) and 4 user LEDs, all 12 with intensity control
8. 9-axis IMU and temperature sensor
9. 3 general purpose 3.3V high-speed serial ports (up to 12.5 Mbaud) ★
10. 1 high-speed 3.3V SPI port (up to 25 MHz) ★
11. 1 high-speed 1.8V SPI port (up to 25 MHz) ★
12. 4 I2C ports (up to 1 MHz) ★
13. 2 CAN bus interfaces (supporting CAN FD)

★ See figure 10 for pin diagram

ID	Description	ID	Description
1	Headlamps	16	J24 (LIDAR) [7 pin] *
2	Front left/right indicators	17	2x Front microphones
3	Brake Lamps	18	2x Rear microphones
4	Reverse indicators	19	Speaker
5	Rear left/right indicators	20	2x HDMI connectors
6	J10 (I2C) [16 pin] *	21	10/100/1000 Base-T Ethernet Jack
7	J11 (GPIO, ENCs, PWMs, ADCs) [40 pin] *	22	Micro USB OTG connector
8	J12 (user LEDs) [5 pin] *	23	4x USB 3.0 connectors
9	J15 (CPU GPIO) [26 pin] *	24	2-line LCD
10	J16 (motor encoder) [5 pin] *	25	NVIDIA Jetson TX2
11	J17 (LIDAR) [5 pin] *	26	Male XT-60 battery connector
12	J19 (CAN) [12 pin] *	27	Main power push-button
13	J20 (SPI and UART) [20 pin] *	28	User push buttons
14	J21 (SPI) [5 pin] *	29	Recovery **(DO NOT USE UNLESS INSTRUCTED BY QUANSER)**
15	J23 (steering servo motor) [3 pin] *	30	TX2 Reset

Table 12. QCar PCB components (* See Figure 10 for pin diagram)

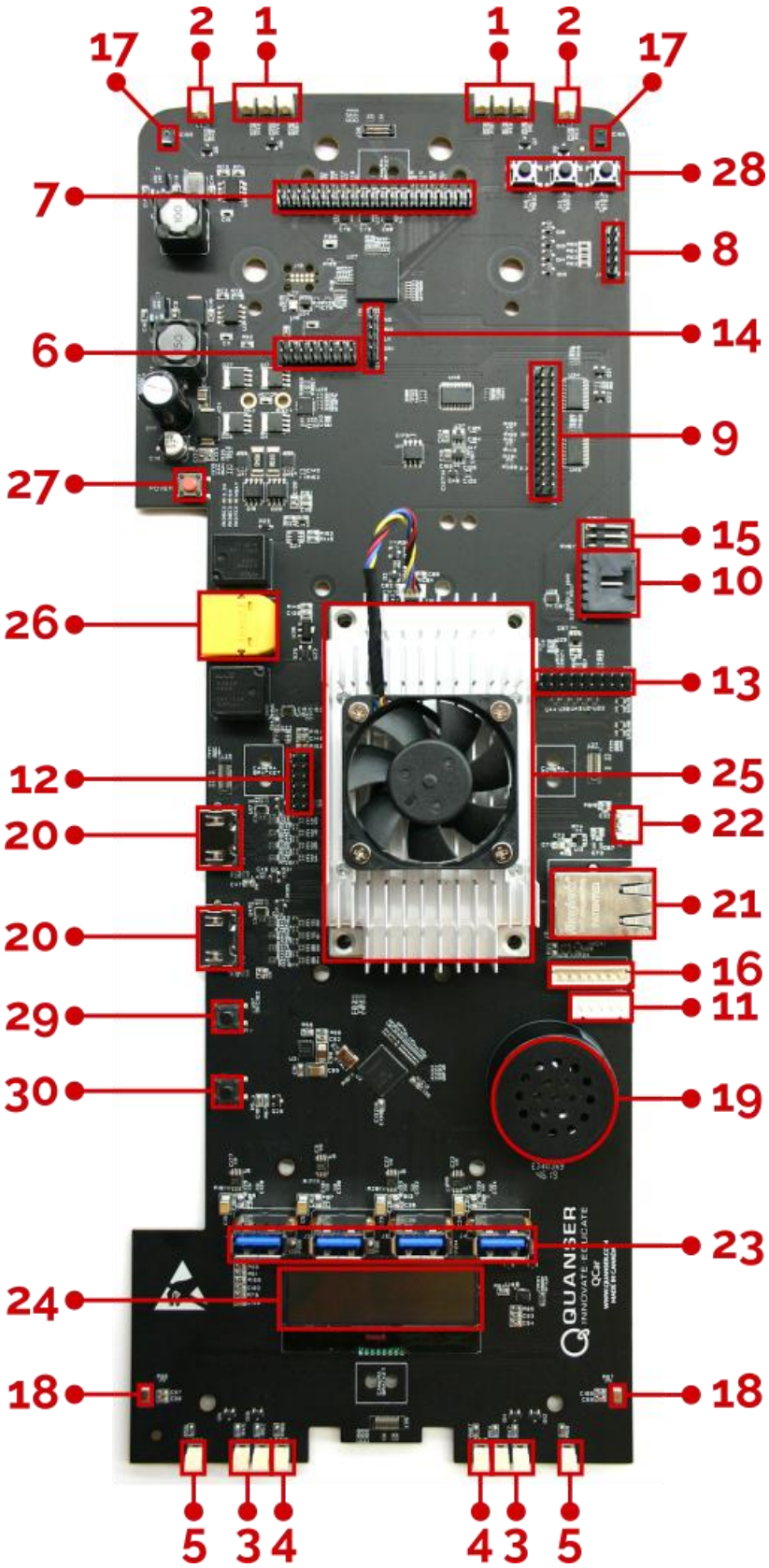
17
2
1
1
2
17
28
7
8
14
6
9
27
15
10
26
13
12
25
20
22
21
20
16
29
11
30
19
23
24
18
18
5
3
4
4
3
5

Figure 9. QCar PCB components

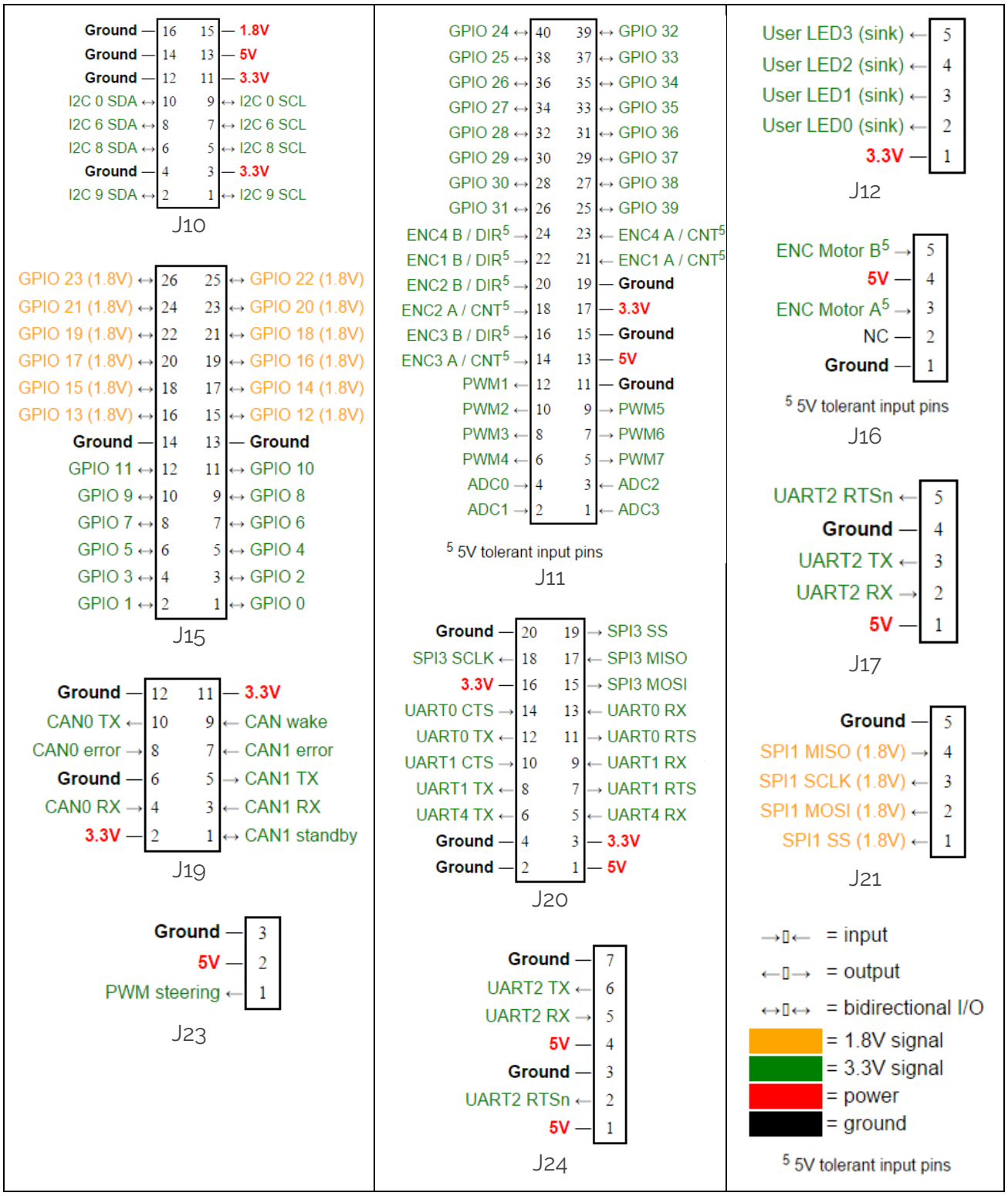

Figure 10. Pin I/O diagram (max current - 5A for 5V pins, 5A for 3.3 V pins, 0.2A for 1.8V pins)

B. Environmental

The QCar is designed to function under the following environmental conditions:

- Standard rating
- Indoor use only
- Temperature 5°C to 40°C
- Altitude up to 2000 m
- Maximum relative humidity of 80% up to 31°C decreasing linearly to 50% relative humidity at 40°C
- Pollution Degree 2
- Mains supply voltage fluctuations up to 10% of nominal voltage
- Maximum transient overvoltage 2500 V
- Marked degree of protection to IEC 60529: Ordinary Equipment (IPX0)

C. Electrical Considerations

ESD warning	The QCar internal components are sensitive to electrostatic discharge. Before handling the QCar, ensure that you have been properly grounded.
Caution	Maximum recommended total current draw from the power pins on user headers is - 5 Amps for 5V - 5 Amps for 3.3V - 0.2 Amps for 1.8V
Caution	Do not have conductive material touch either the top or bottom surface of the PCB as it can short the LiPo battery, cause sparks and damage the electronics.
Caution	Do not remove the Jetson TX2 fan connector or obstruct the fan as it may cause overheating and damage the TX2.
Caution	The QCar is not waterproof.

© Quanser Inc. All rights reserved.

QUANSER
INNOVATE · EDUCATE

Solutions for teaching and research. Made in Canada.