QUANSER
INNOVATE·EDUCATE

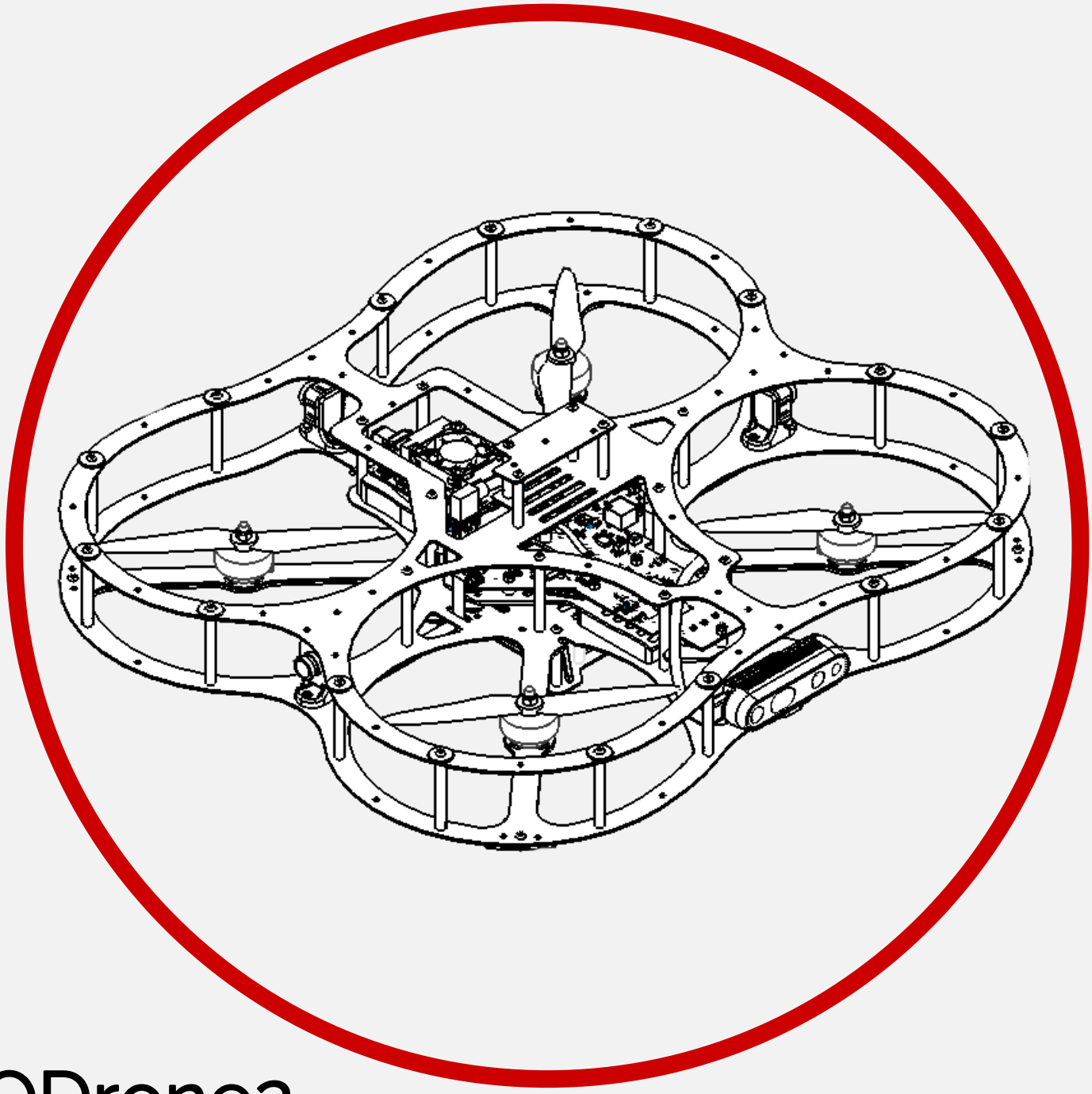

QDrone2

Thrust Parametrization

$v\ 1.0\ -\ 17th\ July\ 2023$

© 2024 Quanser Consulting Inc., All rights reserved.

For more information on the solutions Quanser offers,
please visit the web site at: http://www.quanser.com

Quanser Consulting Inc.
119 Spy Court
Markham, Ontario
L3R 5H6, Canada

info@quanser.com
Phone : 19059403575
Fax : 19059403576
printed in Markham, Ontario.

This document and the software described in it are provided subject to a license agreement. Neither the software nor this document may be used or copied except as specified under the terms of that license agreement. Quanser Consulting Inc. ("Quanser") grants the following rights: a) The right to reproduce the work, to incorporate the work into one or more collections, and to reproduce the work as incorporated in the collections, b) to create and reproduce adaptations provided reasonable steps are taken to clearly identify the changes that were made to the original work, c) to distribute and publicly perform the work including as incorporated in collections, and d) to distribute and publicly perform adaptations. The above rights may be exercised in all media and formats whether now known or hereafter devised. These rights are granted subject to and limited by the following restrictions: a) You may not exercise any of the rights granted to You in above in any manner that is primarily intended for or directed toward commercial advantage or private monetary compensation, and b) You must keep intact all copyright notices for the Work and provide the name Quanser for attribution. These restrictions may not be waved without express prior written permission of Quanser.

Caution

This equipment is designed to be used for educational and research purposes and is not intended for use by the public. The user is responsible for ensuring that the equipment will be used by technically qualified personnel only. **NOTE:** While the GPIO, and USB ports provides connections for external user devices, users are responsible for certifying any modifications or additions they make to the default configuration.

FCC Notice This device complies with Part 15 of the FCC rules. Operation is subject to the following two conditions: (1) this device may not cause harmful interference, and (2) this device must accept any interference received, including interference that may cause undesired operation.
Note: This equipment has been tested and found to comply with the limits for a Class A digital device, pursuant to part 15 of the FCC Rules. These limits are designed to provide reasonable protection against harmful interference when the equipment is operated in a commercial environment. This equipment generates, uses, and can radiate radio frequency energy and, if not installed and used in accordance with the instruction manual, may cause harmful interference to radio communications. Operation of this equipment in a residential area is likely to cause harmful interference in which case the user will be required to correct the interference at his own expense.
Contains FCC ID: SQG-60SIPT

Industry Canada Notice This Class A digital apparatus complies with CAN ICES-3 (A). Cet appareil numérique de la classe A est conforme à la norme NMB-3 (A) du Canada.
Contains IC: 3147A-602230C

Waste Electrical and Electronic Equipment (WEEE)

This symbol indicates that waste products must be disposed of separately from municipal household waste, according to Directive 2012/19/EU of the European Parliament and the Council on waste electrical and electronic equipment (WEEE). All products at the end of their life cycle must be sent to a WEEE collection and recycling center. Proper WEEE disposal reduces the environmental impact and the risk to human health due to potentially hazardous substances used in such equipment. Your cooperation in proper WEEE disposal will contribute to the effective usage of natural resources.

CE Compliance CE

This product meets the essential requirements of applicable European Directives as follows:

- 2014/35/EU; Low-Voltage Directive (safety)
- 2014/30/EU; Electromagnetic Compatibility Directive (EMC)
- 2014/53/EU; Radio Equipment Directive (RED)

Warning: This is a Class A product. In a domestic environment this product may cause radio interference, in which case the user may be required to take adequate measures.

Caution

During flight QDrone 2 sound pressure level has been measured at 92 dBA at 1m away from the QDrone 2 and it is considered hazardous. Users shall ensure that they are not exposed to a sound level greater than the hazardous level as defined by the local authority. Use protective earpieces during operation.

Caution

The Intel RealSense D435 RGB-D camera is classified as a Class 1 Laser Product under the IEC 60825-1, Edition 3 (2014) internationally and EN 60825-1:2014+A11:2021 in Europe. The camera complies with FDA performance standards for laser products except for conformance with IEC 60825-1 Ed. 3 as described in Laser Notice No. 56, dated May 8, 2019.
Do not power on the product if any external damage is observed. Do not open or modify any portion of any laser product as it may cause the emissions to exceed Class 1. Invisible laser radiation when opened. Do not look directly at the transmitting laser through optical instruments such as a magnifying glass or microscope. Do not update laser product firmware unless instructed by Quanser.

Regular maintenance of QDrone 2:

- Inspect the propellers before flight to confirm they are not damaged or loose (able to move while the motor is not moving).
- Prior to using the QDrone 2, visually inspect the LiPo battery for damage (e.g., bloating). **DO NOT USE** the battery if damaged.
- Ensure that the battery and its cables are secured using the provided straps to avoid movement or damage during flight.
- Inspect the QDrone 2 frame before and after each flight to confirm that no major structural damage exists. Repair if needed.

Table of Contents

Table of Contents 1

A. System Parameters 3

B. Thrust - Duty Cycle Motor Mapping 3

C. Motor Mapping Matrix 6

A. System Parameters

The following table summarizes the mechanical parameters of the QDrone2.

Dimensions		
L_{roll}	Length of roll axis	0.254 m
L_{Pitch}	Length of pitch axis	0.2032 m
M_d	Mass of QDrone2	1.146 kg
M_b	Mass of 3700 mAh Battery	0.358 kg
M_t	Takeoff weight	1.504 kg
K_t	Motor torque constant	68.9055 N/N.m
K_v	Motor Speed Constant	1300 RPM/V

Table 1. Mechanical parameters for QDrone2

B. Thrust - Duty Cycle Motor Mapping

To create an accurate model of an aerial vehicle we need to identify the relationship between the voltage command from the ESC to the thrust generated by the rotating propeller. To calculate this relationship, we can use a device called a dynamometer to measure the thrust/current/battery voltage when a PWM command is sent to a motor/propeller combination.

Knowing the battery voltage and duty cycle is important because of the way the PWM command is generated by the ESC.

$$PWM_{Vout} = (V_{in})(Duty_{Cycle}) \tag{1}$$

This relationship is important for us since it gives an estimate of what the voltage command to the motor is. From our dynamometer we can see that the battery voltage is not constant as command percentage changes:

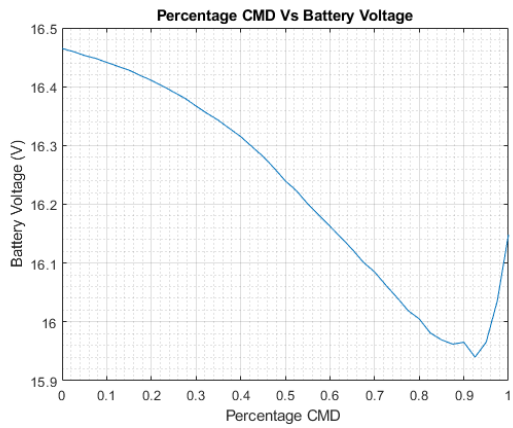

Figure 1: Battery voltage compared to percentage duty cycle command.

For this graph we specified the percentage command as the duty cycle from a 1000-2000Hz PWM pulse. This non-linear relationship means that we need to scale our motor command based on the battery voltage available when the command was generated. We will use this property to parametrize the thrust measured as a function of the desired motor voltage. The percentage command was calculated using the following equation:

$$\%_{CMD} = (ESC_{CMD} - 1000)/1000 \tag{2}$$

We need to predict what the voltage command from the ESC would be based on the $\%_{CMD}$ at that point. As an example using equation (2):

Measured battery voltage = 16.1016V, Duty Cycle = 0.675

$$V_{CMD} = V_{bat}Duty_{cycle} = (16.1016V)(0.675) = 10.8686V$$

At full battery voltage a duty cycle command of 0.675 would result in a voltage command of 11.34V. This implies the duty cycle will slowly increase as the available voltage decreases to generate the same thrust command. The QDrone2 DAQ will scale the duty cycle command depending on the available battery voltage.

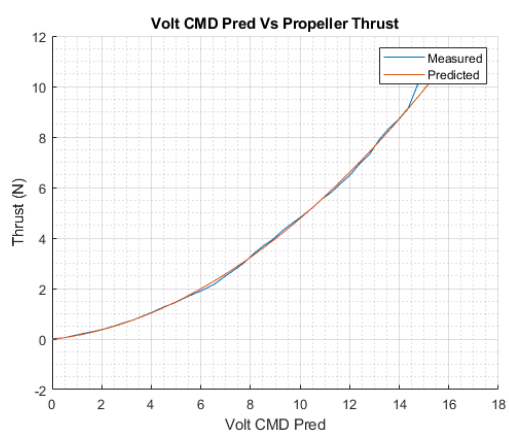

Figure 2: Measured predicted voltage command compared to the measured thrust.

Looking now at the voltage command to thrust relationship in Figure 2 we notice a non-linear relationship as the voltage command increases.

A polynomial fit was used to predict the non-linear relationship between voltage and thrust.

The second order polynomial has the form:

$$T_{pred} = Kt_0\, V_{CMD}^2 + \; Kt_1 V_{CMD} + Kt_2 \tag{3}$$

For the QDrone2 DAQ we require the reverse, based on a required thrust what should the voltage command be. This inverse relationship is calculated as:

$$V_{Pred} = \frac{-Kt_1 + \sqrt{\left(Kt_1^2 - 4Kt_0(Kt_2 - T_{des})\right)}}{2Kt_0} \tag{4}$$

Based on the polynomial fit the coefficients for K_t are:

$$K_t = [K_{t0}, K_{t1}, K_{t2}] = [0.0362\frac{N}{V^2} \quad 0.117\frac{\mathrm{N}}{\mathrm{V}} \; - 0.0121\ \mathrm{N}\,]$$

Figure 2 shows the comparison between the predicted thrust and the measured thrust based on the voltage command sent by the ESC. The last step is looking at the motor torque constant. Plotting the measured torque vs generated thrust gives us the following graph:

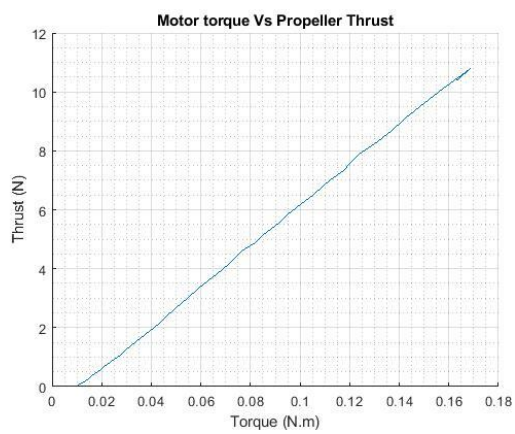

Figure 3: Generated thrust versus measured motor torque

Figure 3 shows a linear relationship which is useful for generating a dynamic model for the QDrone2. Using a polynomial fit the motor torque constants are:

$$K_\tau = [K_{\tau 0}\; K_{\tau 1}] = \left[\, 68.9055\frac{N}{N.m} \quad - 0.7568 N.m \,\right]$$

C. Motor Mapping Matrix

Before formulating the motor mapping matrix, the free body diagram for the QDrone2 is

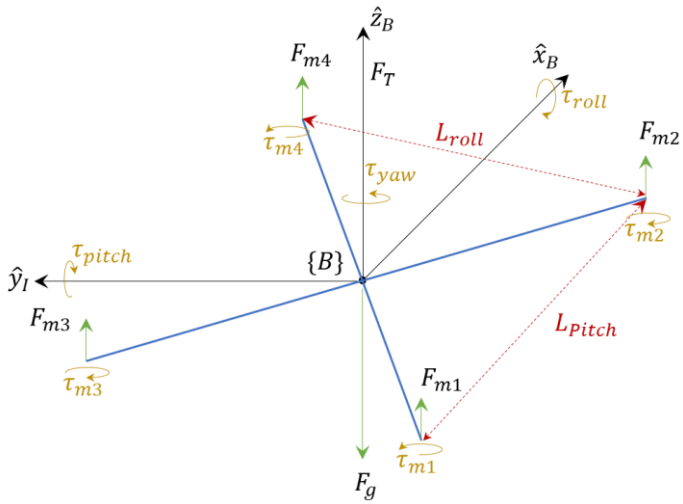

Figure 4: QDrone2 free body diagram

From the free body diagram, we can create the following equations:

$$F_{Net} = F_{m1} + F_{m4} + F_{m3} + F_{m4} - F_g \tag{5}$$

Note that $F_{m1} = F_{m2} = F_{m3} = F_{m4} = F_m$. The desired moments about the 3 principal axes are:

$$M_x = \tau_{roll} = \frac{L_{roll}}{2}(-F_{m1} - F_{m2} + F_{m3} + F_{m4}) \tag{6}$$

$$M_y = \tau_{pitch} = \frac{L_{pitch}}{2}(F_{m1} - F_{m2} + F_{m3} - F_{m4}) \tag{7}$$

$$M_z = \tau_{yaw} = \tau_{m1} - \tau_{m2} - \tau_{m3} + \tau_{m4} \tag{8}$$

To convert from torque to force we can use the equation $\tau = K_\tau F$. We use $k_{\tau 0}$ found in the previous section to scale the motor force to a torque value.

$$M_z = \tau_{yaw} = K_{\tau 0}(F_{m1} - F_{m2} - F_{m3} + F_{m4})$$

This gives us a general motor mapping matrix which allows us to calculate the forces and torques based on the motor commands.

$$\begin{bmatrix} F \\ \tau_{roll} \\ \tau_{pitch} \\ \tau_{yaw} \end{bmatrix} = \begin{bmatrix} 1 & 1 & 1 & 1 \\ -\frac{L_{roll}}{2} & -\frac{L_{roll}}{2} & \frac{L_{roll}}{2} & \frac{L_{roll}}{2} \\ \frac{L_{pitch}}{2} & -\frac{L_{pitch}}{2} & \frac{L_{pitch}}{2} & -\frac{L_{pitch}}{2} \\ \frac{1}{K_{\tau 0}} & -\frac{1}{K_{\tau 0}} & -\frac{1}{K_{\tau 0}} & \frac{1}{K_{\tau 0}} \end{bmatrix} \begin{bmatrix} F_{m1} \\ F_{m2} \\ F_{m3} \\ F_{m4} \end{bmatrix} \tag{9}$$

We are interested in the inverse of the motor mapping matrix to calculate the desired motor thrust based on the higher-level controllers.

$$\begin{bmatrix} F_{m1} \\ F_{m2} \\ F_{m3} \\ F_{m4} \end{bmatrix} = \begin{bmatrix} \frac{1}{4} & -\frac{1}{2L_{roll}} & \frac{1}{2L_{pitch}} & \frac{K_{\tau 0}}{4} \\ \frac{1}{4} & -\frac{1}{2L_{roll}} & -\frac{1}{2L_{pitch}} & -\frac{K_{\tau 0}}{4} \\ \frac{1}{4} & \frac{1}{2L_{roll}} & \frac{1}{2L_{pitch}} & -\frac{K_{\tau 0}}{4} \\ \frac{1}{4} & \frac{1}{2L_{roll}} & -\frac{1}{2L_{pitch}} & \frac{K_{\tau 0}}{4} \end{bmatrix} \begin{bmatrix} F \\ \tau_{roll} \\ \tau_{pitch} \\ \tau_{yaw} \end{bmatrix} \tag{10}$$

With each motor thrust value calculated we use equation 4. to convert the thrust to a voltage command. With the measured battery voltage, the thrust signal is converted to a duty cycle percentage sent to the ESC.

© Quanser Inc. All rights reserved.

QUANSER
INNOVATE · EDUCATE

Solutions for teaching and research. Made in Canada.