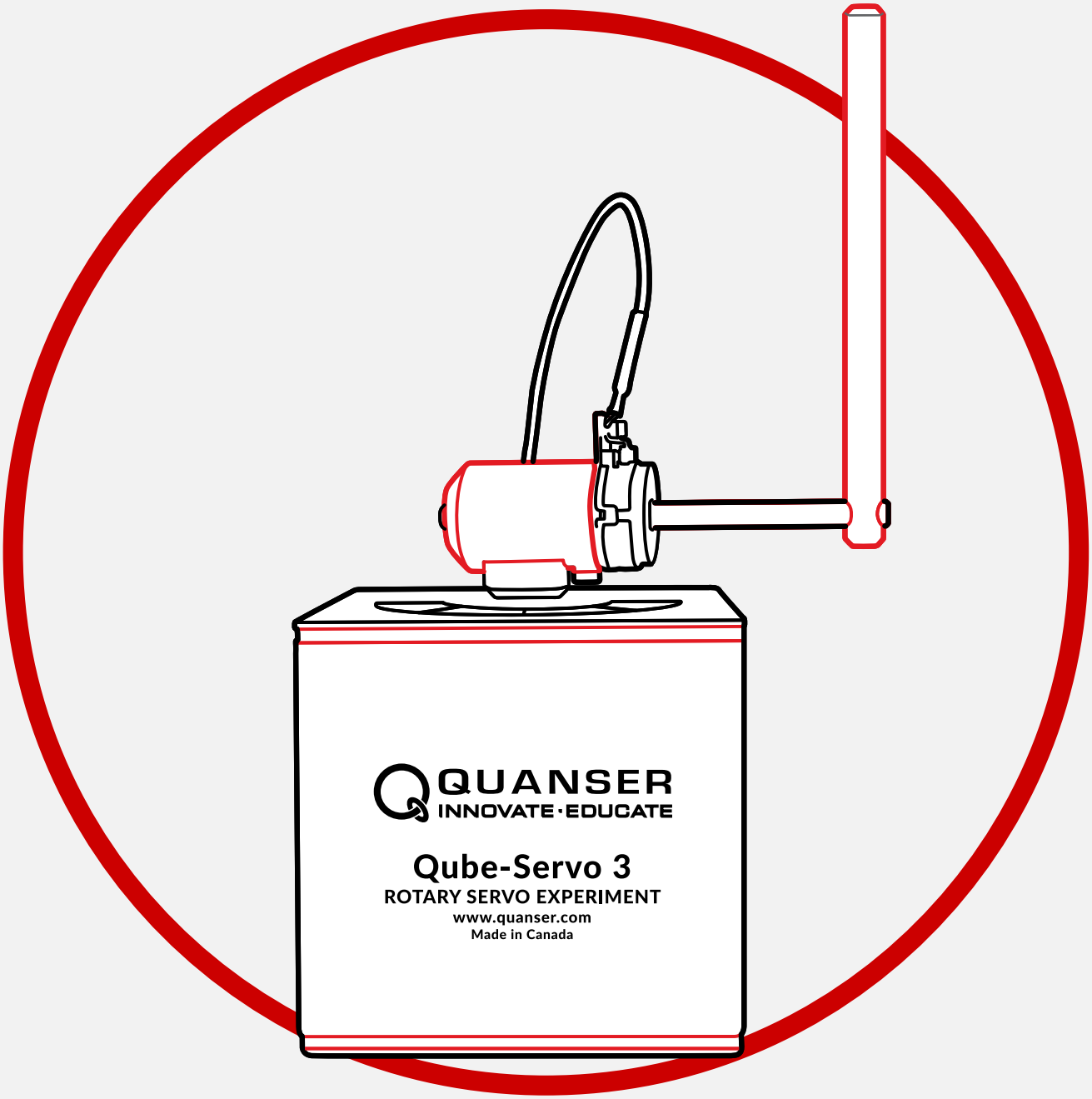

Qube-Servo 3

User Manual

Setup and Configuration

V1.1 – 1st September 2024

© 2024 Quanser Consulting Inc., All rights reserved.

For more information on the solutions Quanser offers,
please visit the web site at: http://www.quanser.com

Quanser Consulting Inc.
119 Spy Court
Markham, Ontario
L3R 5H6, Canada

info@quanser.com
Phone : 19059403575
Fax : 19059403576
printed in Markham, Ontario.

This document and the software described in it are provided subject to a license agreement. Neither the software nor this document may be used or copied except as specified under the terms of that license agreement. Quanser Consulting Inc. ("Quanser") grants the following rights: a) The right to reproduce the work, to incorporate the work into one or more collections, and to reproduce the work as incorporated in the collections, b) to create and reproduce adaptations provided reasonable steps are taken to clearly identify the changes that were made to the original work, c) to distribute and publicly perform the work including as incorporated in collections, and d) to distribute and publicly perform adaptations. The above rights may be exercised in all media and formats whether now known or hereafter devised. These rights are granted subject to and limited by the following restrictions: a) You may not exercise any of the rights granted to You in above in any manner that is primarily intended for or directed toward commercial advantage or private monetary compensation, and b) You must keep intact all copyright notices for the Work and provide the name Quanser for attribution. These restrictions may not be waved without express prior written permission of Quanser.

Caution

This equipment is designed to be used for educational and research purposes and is not intended for use by the public. The user is responsible for ensuring that the equipment will be used by technically qualified personnel only. Users are responsible for certifying any modifications or additions they make to the default configuration.

FCC Notice This device complies with Part 15 of the FCC rules. Operation is subject to the following two conditions: (1) this device may not cause harmful interference, and (2) this device must accept any interference received, including interference that may cause undesired operation.
Note: This equipment has been tested and found to comply with the limits for a Class A digital device, pursuant to part 15 of the FCC Rules. These limits are designed to provide reasonable protection against harmful interference when the equipment is operated in a commercial environment.

Industry Canada Notice This Class A digital apparatus complies with CAN ICES-3 (A). Cet appareil numérique de la classe A est conforme à la norme NMB-3 (A) du Canada.

Japan VCCI Notice This is a Class A product based on the standard of the Voluntary Control Council for Interference (VCCI). If this equipment is used in a domestic environment, radio interference may occur, in which case the user may be required to take corrective actions.

この装置は、クラス A 情報技術装置です。この装置を家庭環境で使用すると電波妨害を引き起こすことがあります。この場合には使用者が適切な対策を講ずるよう要求されることがあります。 VCCI-A

Waste Electrical and Electronic Equipment (WEEE)
This symbol indicates that waste products must be disposed of separately from municipal household waste, according to Directive 2012/19/EU of the European Parliament and the Council on waste electrical and electronic equipment (WEEE). All products at the end of their life cycle must be sent to a WEEE collection and recycling center. Proper WEEE disposal reduces the environmental impact and the risk to human health due to potentially hazardous substances used in such equipment. Your cooperation in proper WEEE disposal will contribute to the effective usage of natural resources.

电子信息产品污染控制管理办法 (中国 RoHS)

中国客户 Quanser Consulting Inc. 关于关于限制在电子电气设备中使用某些有害成分的指令 (RoHS)。

CE Compliance

This product meets the essential requirements of applicable European Directives as follows:

- 2014/30/EU; Electromagnetic Compatibility Directive (EMC)

Warning: This is a Class A product. In a domestic environment this product may cause radio interference, in which case the user may be required to take adequate measures.

Table of Contents

1 Presentation 3

2 System Hardware 4

2.1 System Schematic 4

2.2 Hardware Components 5

2.2.1 DC Motor 6

2.2.2 Encoder 6

2.2.3 Data Acquisition (DAQ) Device 6

2.2.3.1 Deadband Compensation 6

2.2.3.2 PWM Enable 6

2.2.4 Power Amplifier 6

2.3 Environmental 7

2.4 System Parameters 8

3 System Setup 9

3.1 Components 9

3.2 Qube-Servo 3 Hardware Setup 10

Explore other Quanser platforms for mechatronics and robotics teaching and research 11

1 Presentation

The Quanser Qube-Servo 3, pictured in Figure 1.1, is a compact rotary servo system that can be used to perform a variety of classic servo control and inverted pendulum-based experiments. The Qube-Servo 3 allows control by a computer via USB connection.

The system is driven using a 24V direct drive brushed DC motor. The motor is powered by a built-in PWM amplifier with integrated current sense. Two add-on modules are supplied with the system: an Inertia disc and a Rotary pendulum. The modules can be easily attached or interchanged using magnets mounted on the Qube-Servo 3 module connector. Single-ended rotary encoders are used to measure the angular position of the DC motor and pendulum, and the angular velocity of the motor can also be measured using an integrated software-based tachometer.

Main Qube-Servo 3 features:

- Compact and complete rotary servo system
- 24V direct drive brushed DC motor
- Encoders mounted on DC motor and pendulum
- DC motor and pendulum tachometer output
- Built-in PWM amplifier with integrated current sense
- Built-in data acquisition (DAQ) device
- Inertia disc module
- Rotary pendulum module
- Tri-color LED indicator lights

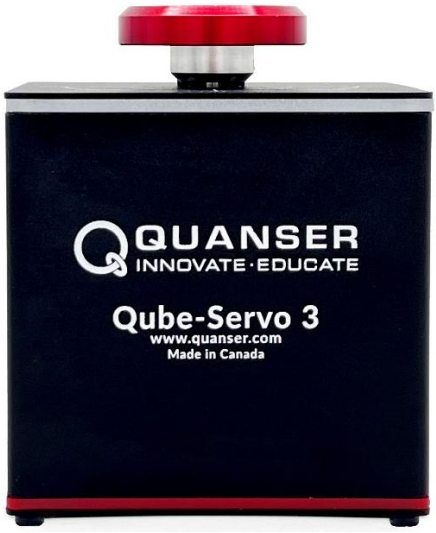

Figure 1.1 Quanser Qube-Servo 3

⚠ Caution: **This equipment is designed to be used for educational and research purposes and is not intended for use by the general public.** The user is responsible for ensuring that the equipment will be used by technically qualified personnel only.

2 System Hardware

2.1 System Schematic

The Qube-Servo 3 provides a USB interface for use with a computer.

The interaction between the different system components on the Qube-Servo 3 is illustrated in Figure 2.1. On the data acquisition (DAQ) device block, the motor and pendulum encoders are connected to the Encoder Input (EI) channels #0 and #1. The Analog Output (AO) channel is connected to the power amplifier command, which then drives the DC motor. The DAQ Analog Input (AI) channel is connected to the PWM amplifier current sense circuitry. The DAQ also controls the integrated tri-color LEDs.

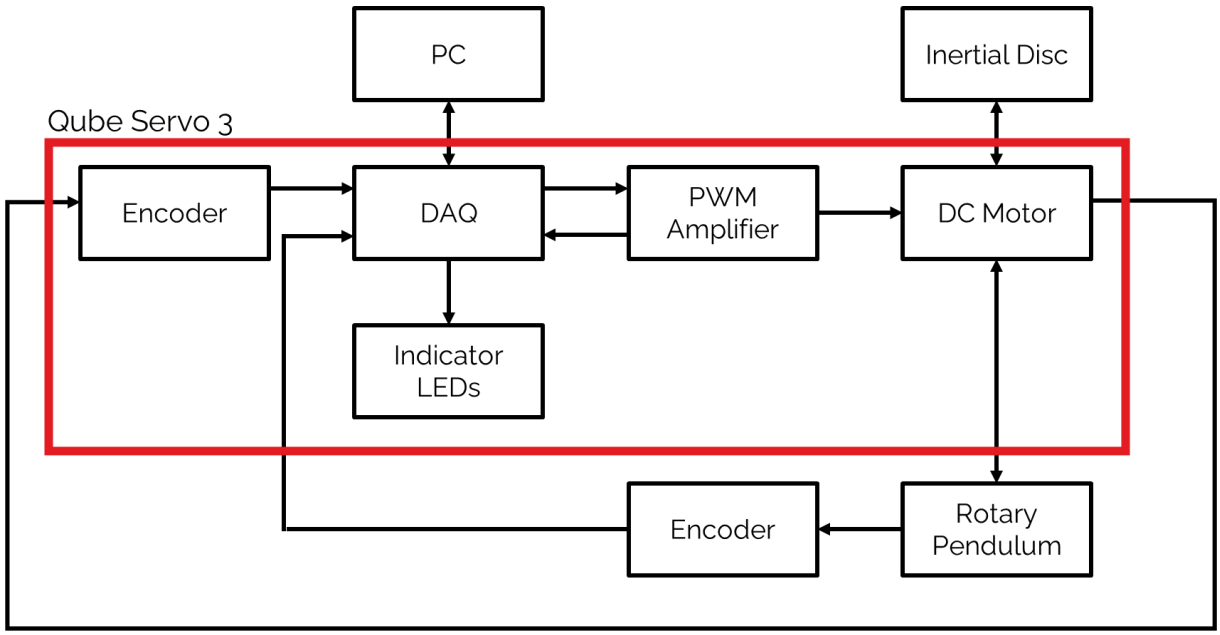

Figure 2.1 Interaction between Qube-Servo 3 components

2.2 Hardware Components

The main Qube-Servo 3 components are listed in Table 2.1.

ID	Component	ID	Component
1	Chassis	9	Pendulum arm
2	Module connector	10	Rotary arm rod
3	Module connector magnets	11	Rotary arm hub
4	Status LED strip	12	Rotary pendulum magnets
5	Module encoder connector	13	Pendulum encoder
6	Power connector	14	USB C connector
7	System power LED	15	Power switch
8	Inertia disc		

Table 2.1 Qube-Servo 3 Components

(a) Qube-Servo 3 Back View

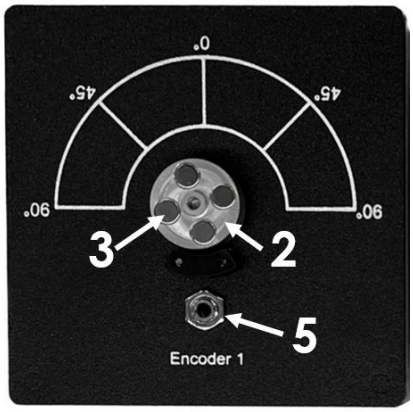

(e) Qube-Servo 3 Top View

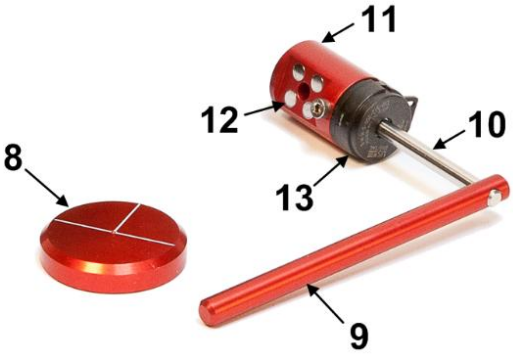

(d) Qube-Servo Modules

Figure 2.2 Qube-Servo 3 components

2.2.1 DC Motor

The Qube-Servo 3 includes a direct-drive brushed DC motor. The motor specifications are given in Table 2.2. The motor datasheet is attached alongside this document.

Caution: Exposed moving parts.

2.2.2 Encoder

The encoders used to measure the angular position of the DC motor and pendulum on the Qube-Servo 3 are single-ended optical shaft encoders. They output 2048 counts per revolution in quadrature mode (512 lines per revolution). Digital tachometers are also available for angular speed in counts/sec on channels 14000 and 14001.

2.2.3 Data Acquisition (DAQ) Device

The Qube-Servo 3 includes an integrated data acquisition device with two 24-bit encoder channels with quadrature decoding and one analog/PWM output channel. The analog output channel emulates a linear amplifier by incorporating deadband compensation. The PWM output channel can be used to directly access the amplifier duty cycle. The DAQ also incorporates a 12-bit ADC which provides current sense feedback for the motor. The DAQ is used to detect motor stalls and will disable the amplifier if a prolonged stall is detected when a voltage above 5V is applied. The digital I/O provides feedback for stall warnings, stall errors and amplifier faults.

2.2.3.1 Deadband Compensation

The Qube-Servo 3 has a default deadband compensation to simplify the learning experience by compensating for the non-linearities of the Qube-Servo 3 PWM power amplifier.

To change the compensation, when initializing the HIL device add the board/card specific option *deadband_compensation*. For example, to make it 0, set *deadband_compensation=0* to remove all compensation.

2.2.3.2 PWM Enable

The Qube-Servo 3 driver supports one PWM output channel, which is channel 0. The *pwm_en* board specific option must be set in order to use PWM output on this card. Set this option to "yes", "y", or "1" to enable control of the motor using PWM command. When this option is set, the analog output cannot be used. This will also disable the deadband compensation and ignore any user-specified deadband compensation value in the board specific options.

2.2.4 Power Amplifier

The Qube-Servo 3 circuit board includes a PWM voltage-controlled power amplifier. Table 2.2 in section 2.4 describes its specifications.

2.3 Environmental

The Qube-Servo 3 is designed to function under the following environmental conditions:

- Standard rating
- Indoor use only
- Temperature 5◦C to 40◦C
- Altitude up to 2000 m
- Maximum relative humidity of 80% up to 31◦C decreasing linearly to 50% relative humidity at 40◦C
- Pollution Degree 2
- Mains supply voltage fluctuations up to ± 10% of nominal voltage
- Maximum transient overvoltage 2500 V
- Marked degree of protection to IEC 60529: Ordinary Equipment (IPX0)

2.4 System Parameters

Table 2.2 lists and characterizes the main parameters associated with the Qube-Servo 3.

Symbol	Description	Value
V_{nom}	Nominal input voltage	24.0 V
τ_{nom}	Nominal torque	20.4 mN-m
ω_{nom}	Nominal speed	5400 RPM
I_{nom}	Nominal current	0.5 A
R_m	Terminal resistance	7.5 Ω
k_t	Torque constant	0.0422 N-m/A
k_m	Motor back-EMF constant	0.0422 V/(rad/s)
J_m	Rotor Inertia	1.4×10^{-6} kg-m²
L_m	Rotor inductance	1.15 mH
m_h	Module attachment hub mass	0.0106 kg
r_h	Module attachment hub radius	0.0111 m
J_h	Module attachment moment of Inertia	0.6×10^{-6} kg-m²
Inertia Disc Module		
m_d	Disc mass	0.053 kg
r_d	Disc radius	0.0248 m
Rotary Pendulum Module		
m_r	Rotary arm mass	0.095 kg
L_r	Rotary arm length (pivot to end of metal rod)	0.085 m
m_p	Pendulum link mass	0.024 kg
L_p	Pendulum link length	0.129 m
Motor and Pendulum Encoders		
	Encoder line count	512 lines/rev
	Encoder line count in quadrature	2048 lines/rev
	Encoder resolution (in quadrature, deg)	0.176 deg/count
	Encoder resolution (in quadrature, rad)	0.00307 rad/count
Amplifier		
	Amplifier type	PWM
	Peak Stall Current	1.8A @ 15V
	Continuous Sustainable Current	0.58A @ 5V
	Output voltage range (recommended)	±10 V
	Output voltage range (maximum)	±15 V
	Default deadband	0.65V

Table 2.2: Qube-Servo 3 System Parameters

3 System Setup

Caution: If the equipment is used in a manner not specified by the manufacturer, the protection provided by the equipment may be impaired.

3.1 Components

To setup the Qube-Servo 3 system, you need the following components:

1. Qube-Servo 3
2. Inertia disc module (shown in Figure 3.1a)
3. Rotary Pendulum module (shown in Figure 3.1b)
4. Power supply with the following ratings:
   - Input Rating: 100-240 V AC, 50-60 Hz, 1.4 A
   - Output Rating: 24 V DC, 2.71 A

   Note: Only the power supply provided (AC-DC adapter by TRUMPower, model ATS065T-P240) should be used with the Qube-Servo 3
5. Power cable

   Note: Only the power cable provided should be used with the Qube-Servo 3

   Caution: Precaution must be taken during the connection of this equipment to the AC outlet to make sure the grounding (earthing) is in place, and that the ground wire is not disconnected
6. USB A to C cable

(a) Qube-Servo 3 with Inertia Disc Module

(b) Qube-Servo 3 with Pendulum Module

Figure 3.1 Qube-Servo 3 components

3.2 Qube-Servo 3 Hardware Setup

To setup the Qube-Servo 3 follow these steps:

1. Download either QUARC® or the Quanser HIL APIs.
2. Connect USB C cable from back cover of Qube-Servo 3 to an enabled USB port on your desktop PC or laptop.
3. Connect the **Power** connector on the Qube-Servo 3 to the power supply. Ensure the power supply is connected to a wall outlet using the appropriate power cable.
4. Turn on the Qube-Servo 3 using the switch in the back. The LED strip across the top should turn RED. Make sure the small LED next to the USB C port is GREEN. Your computer should automatically detect the Qube-Servo 3.
5. Attach the Inertia disc or rotary pendulum module to the motor hub using the magnets. The Qube-Servo 3 is shown with the Inertia disc and rotary pendulum modules setup in Figure 3.1.
6. **Rotary Pendulum Users**: If you are using the pendulum attachment, connect the encoder cable from the pendulum module encoder to the **Encoder 1** connector on the top panel of the Qube-Servo 3 (connector shown in Figure 2.2e). The Qube-Servo 3 with the attached pendulum and connected cable is pictured in Figure 3.1b.

Explore other Quanser platforms for mechatronics and robotics teaching and research

For more information, visit www.quanser.com

© Quanser Inc., All rights reserved.

QUANSER
INNOVATE · EDUCATE

Solutions for teaching and research. Made in Canada.