Concept Review

Brushed DC Motors

Why use Brushed DC Motors?

Brushed DC motors remain one of the most widely used actuators in mechatronic systems due to their simplicity, low cost, and ease of control. Their linear torque-speed characteristics and predictable behavior make them ideal for applications ranging from small toys and appliances to automotive systems and industrial machinery. While they may not match the efficiency or lifespan of brushless alternatives, their straightforward construction, intuitive operation, and minimal control requirements continue to make them the preferred choice for many applications.

Introduction

A brushed DC motor converts direct current electrical energy into mechanical rotational energy through electromagnetic interactions. Unlike more complex motor types that require sophisticated drive electronics, brushed DC motors can operate directly from a DC power source with basic speed control achieved through voltage variation. The motor generates torque by passing current through windings in the rotor (armature) which interact with a magnetic field produced by permanent magnets or electromagnets in the stator. The distinctive feature of brushed DC motors is their use of carbon brushes and a segmented commutator to mechanically switch the direction of current flow through the rotor windings as the motor rotates, maintaining continuous torque production. This self-commutating design eliminates the need for external position sensing or complex electronic controllers, making brushed DC motors inherently simple to operate.

Basic Construction and Operation

The fundamental principle relies on the Lorentz force law: when a current-carrying conductor is placed in a magnetic field, it experiences a force perpendicular to both the current direction and the magnetic field. By continuously switching the current direction through the commutator, the motor maintains a consistent torque direction, resulting in continuous rotation.

A typical brushed DC motor consists of four main components: the stator, the rotor or armature, the commutator, and the carbon brushes. These components, shown in Figure 1, work together to create controlled rotational motion.

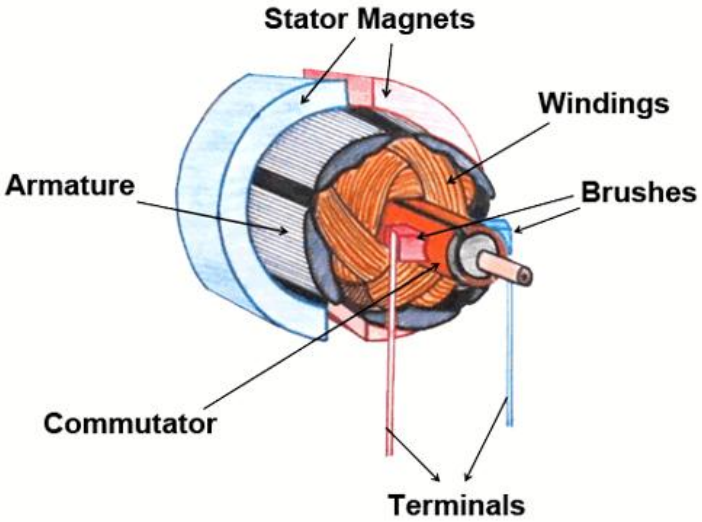

Figure 1. Brushed DC Motor

The stationary **stator** provides a magnetic field, typically using either permanent magnets (in permanent magnet DC motors) or electromagnets (in wound field motors). The rotating **rotor** consists of multiple windings wrapped around a laminated iron core, with each winding connected to specific segments of the commutator. As current flows through these windings, they generate their own magnetic field that interacts with the stator field to produce torque.

The **commutator** is a cylindrical assembly of copper segments insulated from each other, mounted on the motor shaft. Each segment connects to specific rotor windings. **Carbon brushes**, held against the commutator by springs, provide sliding electrical contacts that deliver current from the stationary power source to the rotating windings.

Operating Principle

The operation follows a cyclical process of magnetic interaction and commutation. When voltage is applied across the brushes, the current flows through the commutator and rotor windings. This current creates a magnetic field around the rotor windings that interacts with the stator's magnetic field according to Fleming's Left Hand Rule, generating a force that causes rotation as shown in Figures 2 and 3a. The rotor coil is powered through the commutator ring and the carbon brushes to induce a magnetic field that is opposite to the external field from the stator, hence both north and south poles repel each other. The rotor continues to rotate through the position where the magnetic field of the rotor is perpendicular to that of the stator as in Figure 3b.

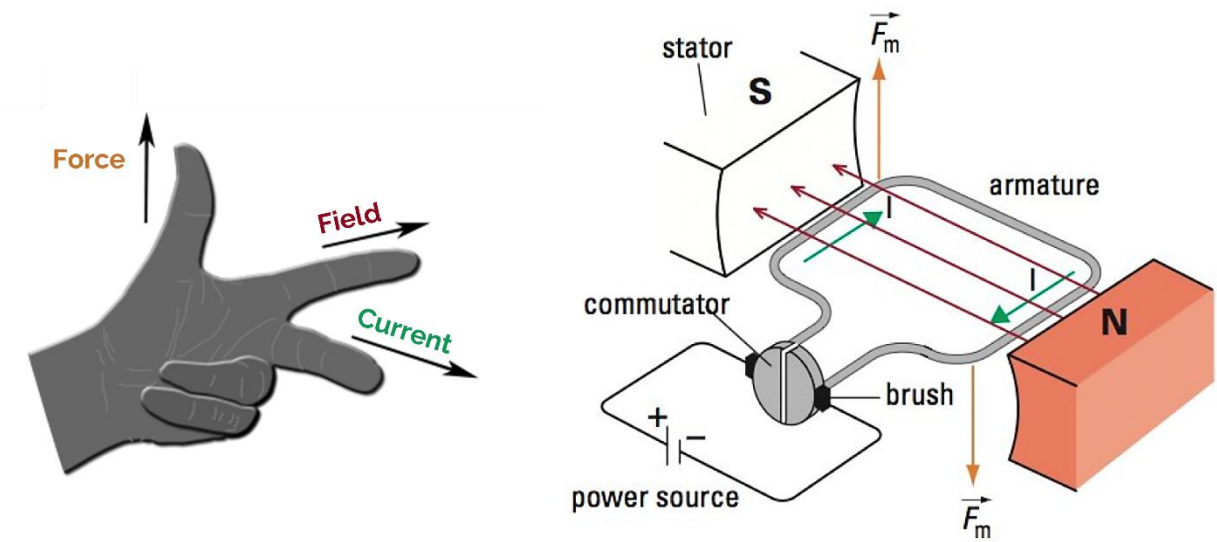

Figure 2: Applied current generates an electromotive force according to Fleming's left-hand rule

As the rotor approaches alignment with the stator field (where torque would drop to zero), as shown in Figure 3c, the commutator segments rotate past the brushes, switching the current to the next set of windings. This switching reverses the rotor's magnetic polarity, ensuring the magnetic forces continue pushing in the same rotational direction. The process repeats continuously, with the commutator acting as a mechanical inverter that maintains optimal torque production throughout rotation.

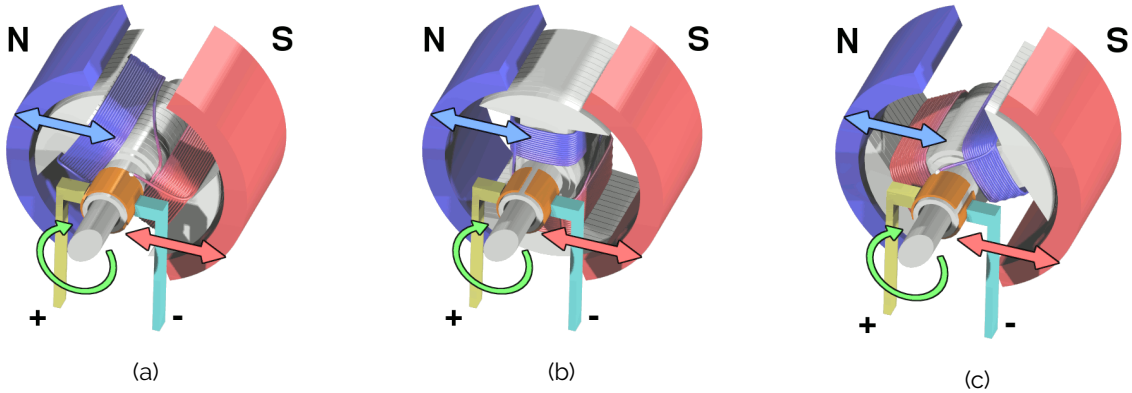

Figure 3. Sequential diagrams showing rotor position at different rotor angles

In reality, the insides of a DC motor look like the one shown in Figure 4. Although diagrams usually show a 2-pole rotor for simplicity, most motors use 3 or 5 pole rotors. This prevents dead zones where the motor produces no torque.

Figure 4. Real life rotor

Driving a Brushed DC Motor

Wiring

Brushed DC motors typically have two wire connections for basic operation: a positive (red) and negative or ground (black) connection. Compared to servo motors with their three-wire configuration, brushed DC motors are simpler to wire but lack built-in position control. Instead, it is common for some DC motor assemblies to include encoders or tachometers that are mechanically attached to the motor shaft. Figure 5 shows a sample wiring color code, which lists the motor and encoder connections by wire color. Note that the encoder wiring diagram tends to vary per encoder manufacturer and the datasheet needs to be used to confirm proper wiring.

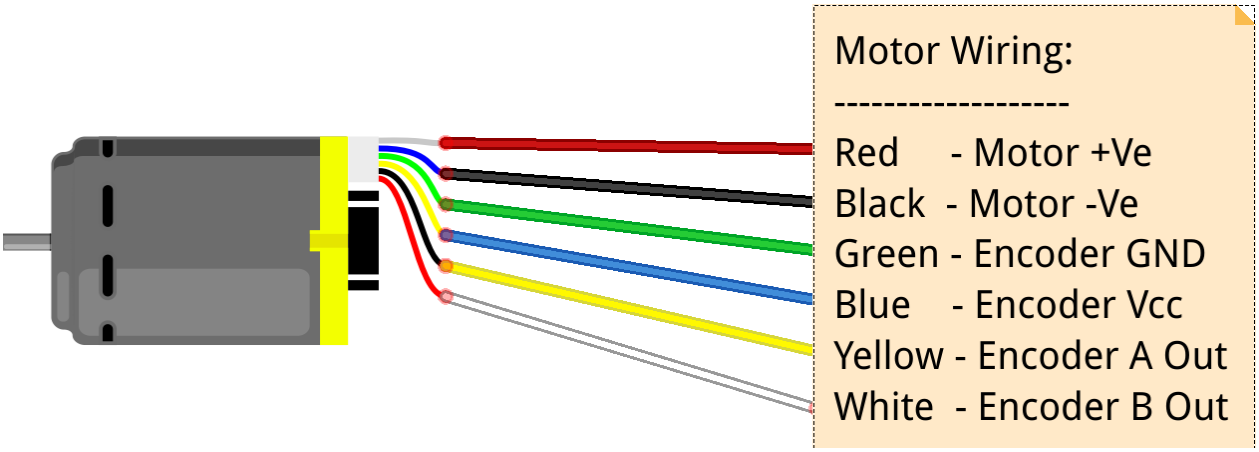

Figure 5: Typical brushed DC motor wire connections and color coding

The polarity of the connection determines the rotation direction—reversing the polarity reverses the motor's rotation. For motors with attached encoders like the one in the GMP24-370CA datasheet (motor supplied with the Mechatronics Actuators Trainer), the additional wires outside of the red and black help provide position feedback: typically including encoder power (V_{CC}), ground, and channel outputs (A, B, and sometimes Z for index).

When wiring brushed DC motors, ensure that the wire gauge and connector types are sufficient for the motor's maximum current draw.

Voltage Control

One method to control a brushed DC motor is through direct voltage control. The motor's speed is approximately proportional to the applied voltage (minus losses), while the torque is proportional to the current drawn. This relationship can be expressed as:

$$\text{Speed (RPM)} = (V - I \times R) \times K_V$$

Where V is applied voltage, I is current, R is motor resistance, and K_V is the motor's speed constant.

PWM Control

For speed control, Pulse Width Modulation (PWM) is the standard approach since it is more efficient, produces less heat, and provides higher torque at low speeds. PWM rapidly switches the applied signal between full voltage ("on") and zero voltage ("off"). The percentage of time that the voltage signal is on is called the **duty cycle**, and this value determines the effective average voltage. A 50% duty cycle at 12V provides an effective 6V for the motor, as shown in Figure 6. PWM frequencies typically range from 1kHz to 20kHz, with higher frequencies reducing audible noise but potentially increasing switching losses.

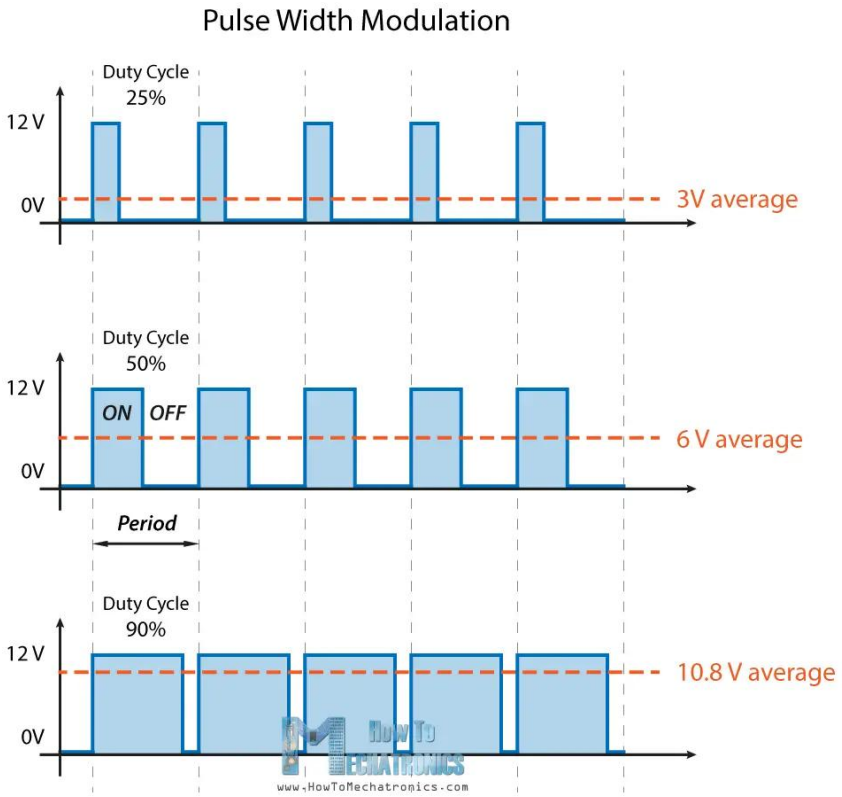

Figure 6. PWM with different duty cycles and resulting effective voltages

H-Bridge Configuration

To enable bidirectional control and braking, an H-bridge circuit is commonly used. This configuration uses four switches (typically MOSFETs or transistors) arranged in an 'H' pattern around the motor as shown in Figure 7.

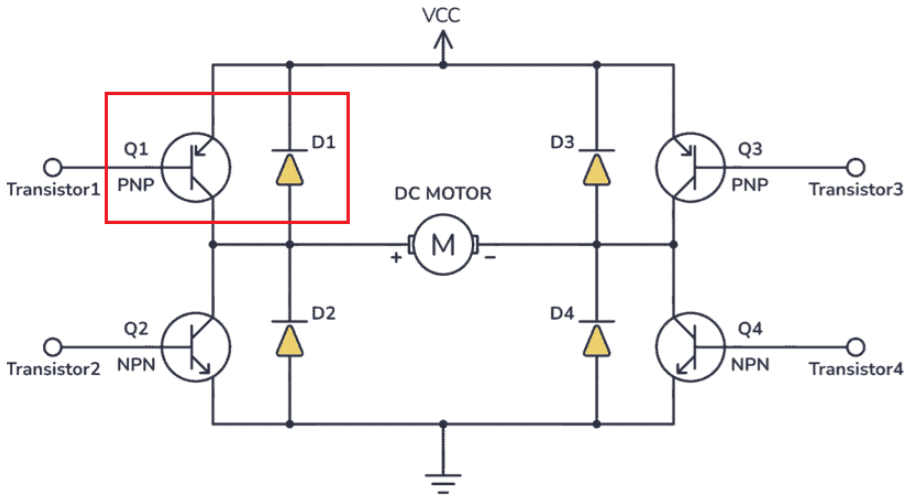

Figure 7. H bridge to help drive a motor. The circuit in red acts like a switch.

Specific sets of switches are closed to achieve different operating modes:

- **Forward**: Switches 1 and 4 closed (Figure 8a)
- **Reverse**: Switches 2 and 3 closed (Figure 8b)
- **Brake**: Both bottom (or both top) switches closed, shorting the motor
- **Coast**: All switches open, motor freewheels

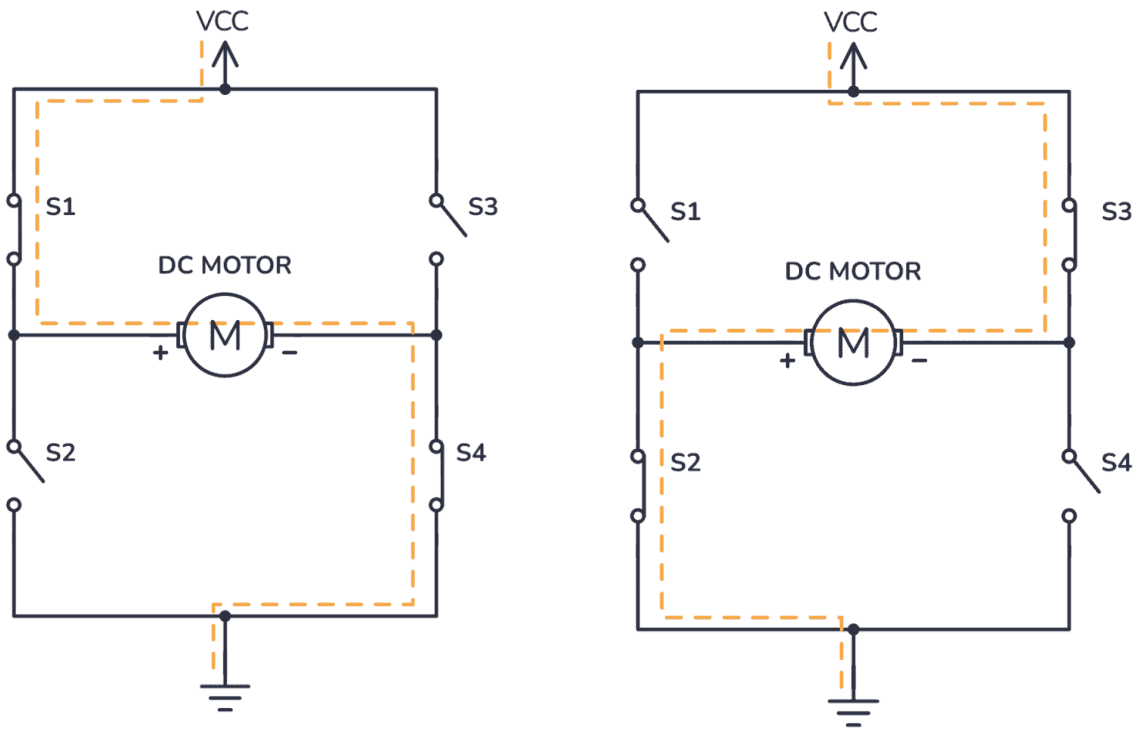

(a) Motor rotating in the positive direction

(b) Motor rotating in the negative direction

Figure 8. H-Bridge diagram with different switching modes to turn forward or backwards

Current Limiting and Protection

Since brushed DC motors can draw very high currents during stall conditions, current limiting is essential to prevent damage to both the motor and driver circuit. Methods include:

- Hardware current sensing with comparator shutdown
- Software current monitoring with PWM adjustment
- Thermal protection to prevent overheating
- Overcurrent fuses or circuit breakers for fault protection

Datasheet And Considerations

The motor's datasheet summarizes its key electrical and mechanical characteristics and are essential when selecting a motor for a project or application.

Understanding a Brushed DC Motor Datasheet

This section will mostly focus on the electrical information, however, note that there will also be mechanical information about the motor, usually in the form of a mechanical drawing. This information is important for deciding if a motor will physically fit in a required space, or mount effectively.

Rated Voltage

This is the voltage at which the motor is designed to run, and at which the motor will have been tested for other specifications. Small brushed DC motors typically operate at voltages between 3V and 24V, with common values being 6V, 12V, and 24V. If the motor voltage is significantly lower than the power supply, the motor may overheat or be damaged. If the supply voltage is lower than rated, the motor will produce less torque and run slower than specified. Most brushed DC motors can tolerate ±10-20% voltage variation for short periods.

No Load Speed

This parameter is the maximum rotational velocity when no external load is applied to the motor shaft. It represents the theoretical maximum speed the motor can achieve. The actual operating speed will always be lower than this value and depends on the applied load torque. For geared motors, this speed is already reduced by the gear ratio—for instance, a motor with 3000 RPM and a 1:100 gear ratio would have a no-load output speed of 30 RPM.

Stall Current and Stall Torque

Stall torque is the maximum torque the motor can produce when the shaft is prevented from rotating. At this point, the motor draws its maximum current (stall current). While useful for determining if a motor can overcome initial resistance or handle brief overloads, motors should never operate at stall for more than a few seconds as they will rapidly overheat. The stall current can be 5-10 times higher than the rated current, so power supplies and drivers must be sized accordingly.

Rated Speed and Torque

Unlike the extremes of no-load and stall conditions, rated values represent the motor's intended continuous operating point. Rated speed is the rotational velocity under rated load, while rated torque is the sustainable torque output without overheating. These values indicate where the motor operates most efficiently and can run indefinitely without damage. When selecting a motor, ensure the rated torque exceeds your application's typical requirements by a safety margin of at least 20-30%.

Gear Reduction Ratio

For geared motors, the reduction ratio indicates how much the motor's speed is reduced (and torque is increased) by the gearbox. A 1:100 ratio means the output shaft rotates 100 times slower than the motor but with approximately 100 times more torque, minus efficiency losses. Common configurations include:

- **Direct drive (1:1):** Maximum speed, minimum torque
- **Low reduction (1:4 to 1:20):** Balanced speed and torque
- **High reduction (1:50 to 1:500+):** High torque, low speed applications

Note that each gear stage typically reduces efficiency by 5-10%, so a 4-stage gearbox might only deliver 65-75% of the theoretical torque multiplication.

Design Decisions

Torque-Speed Characteristics

Brushed DC motors exhibit a linear inverse relationship between torque and speed: maximum torque occurs at zero speed (stall), while maximum speed occurs at zero torque (no-load). This characteristic, shown in Figure 8, helps predict motor performance at any operating point. The motor naturally finds its operating speed where the torque it produces matches the load torque.

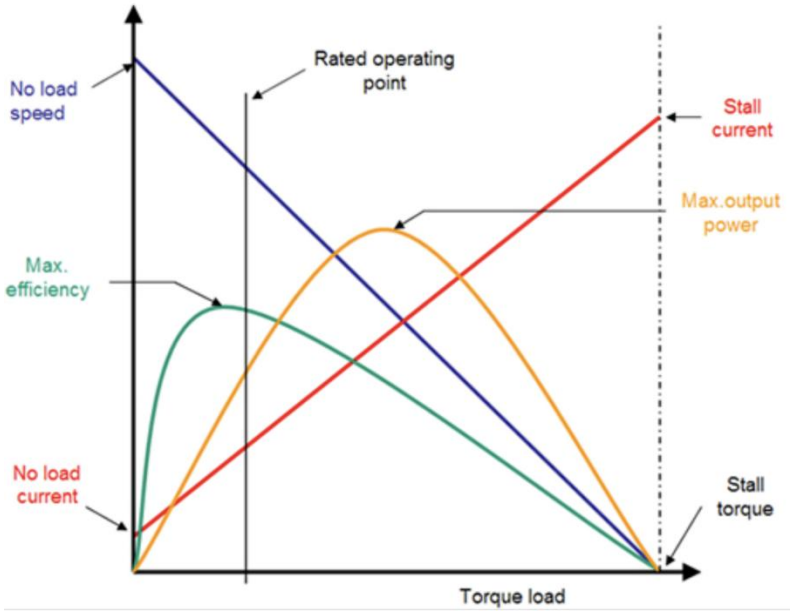

Figure 8. DC Motor Torque-Speed Characteristic

Power and Efficiency

Motor efficiency peaks at approximately 10-20% of stall torque, typically achieving 75-85% efficiency for quality motors. Efficiency drops significantly at very light loads (due to friction losses) and heavy loads (due to I^2R losses in the windings). When calculating battery life or heat dissipation, assume 70% efficiency for conservative estimates. Geared motors have lower overall efficiency due to gear losses.

Control Complexity

One of the primary advantages of brushed DC motors is their simplicity, requiring a relatively low number of components depending on the desired functionality:

- **On/off control**: Simple switch or relay
- **Speed control**: Variable resistor or PWM controller
- **Direction control**: H-bridge or DPDT relay
- **Precision control**: Encoder feedback with PID controller

This minimal control requirement reduces system cost and complexity compared to stepper or BLDC motors, making brushed motors ideal for cost-sensitive or simple applications.

Maintenance and Lifespan

Since DC motors operate using mechanical commutation, the brushes and commutator are components that are subject to wear, which limits the motor lifespan. Typical brush life ranges from:

- **Light duty** (intermittent operation): 2000-5000 hours
- **Continuous operation**: 1000-2000 hours
- **Heavy/stall loads**: 100-500 hours

Environmental factors like dust, humidity, and temperature extremes can also reduce brush life. System design may include planning for maintenance access in critical applications or consider brushless alternatives for maintenance-free operation.

Noise and EMI Considerations

The components of a DC motor make it susceptible to acoustic noise from friction between the brush and commutator. Electromagnetic interference (EMI) is a type of electrical noise that can be caused by sparks and rapid current switching. Electrical noise can be mitigated by adding components such as ferrite beads, capacitors or shielding.

© Quanser Inc., All rights reserved.

QUANSER
INNOVATE · EDUCATE

Solutions for teaching and research. Made in Canada.