QUANSER
INNOVATE·EDUCATE

Concept Review

Rotary Sensors

Why Use Rotational Motion?

Rotary sensors can be used to in a wide range of applications for varying electromechanical systems that require either monitoring or controlling rotational motion or displacement. These sensors transform mechanical rotational motion into either analog or digital electrical signals. They are used in a variety of systems today including but not limited to peripheral optical mice, cameras, robotics, autonomous cars, airplanes, Most common types of rotary sensors include potentiometers and encoders, and their use is dictated by constraints related to cost, life-cycle, and form-factor.

Rotary Potentiometers

A rotary potentiometer, or pot, is a manually controlled variable resistor. See the example shown in Figure 1. It typically consists of an exposed shaft, three terminals (A, W, and B), an encased internal resistive element shaped in a circular pattern, and a sliding contact known as a wiper. By rotating the shaft, the internal wiper makes contact with the resistive element at different positions, causing a change in resistance when measured between the center terminal (W) and either of the side terminals (A or B). The total resistance of the potentiometer can be measured by clamping a multimeter to terminals A and B.

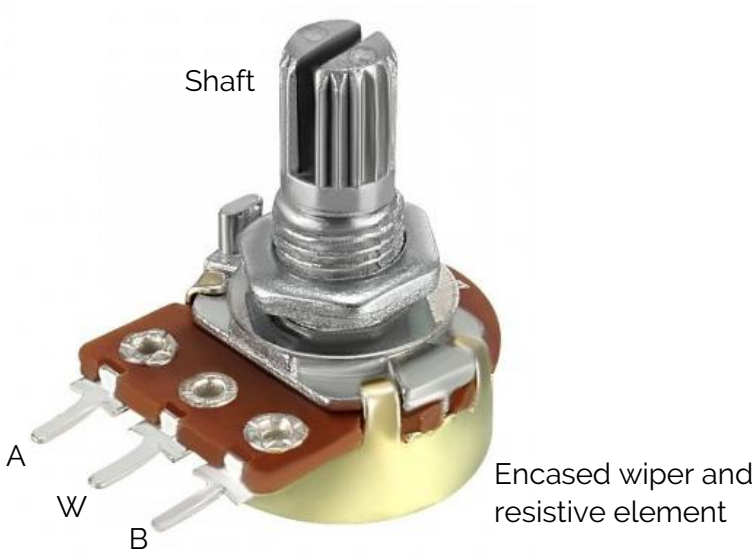

Figure 1: Schematic diagram of a potentiometer

A schematic diagram of the voltage dividing characteristic of a potentiometer is illustrated in Figure 2. By applying a known voltage V_{AB} between terminals A and B, voltage is divided between terminals AW and WB where,

$$V_{AB} = V_{AW} + V_{WB}$$

When connected to an external shaft, a rotary potentiometer can measure absolute angular displacement. By applying a known voltage to the outside terminals of the pot, we can determine the position of the sensor based on the output voltage VAW or VW B which will be directly proportional to the position of the shaft. One of the advantages of using a potentiometer as an absolute sensor is that after power loss, position information is retained since the resistance of the pot remains unchanged. While pots are an effective way to obtain a unique position measurement, caution must be used since their signal output may be discontinuous. That is, after a few revolutions potentiometers may reset their signal back to zero. Another disadvantage of most pots is that they have physical stops that prevent continuous shaft rotation. Drag forces between the resistive element the encased wiper must also be overcome by the mechanical system they are attached to, and wear and tear is an important consideration based on the life-cycle of the system they are used in.

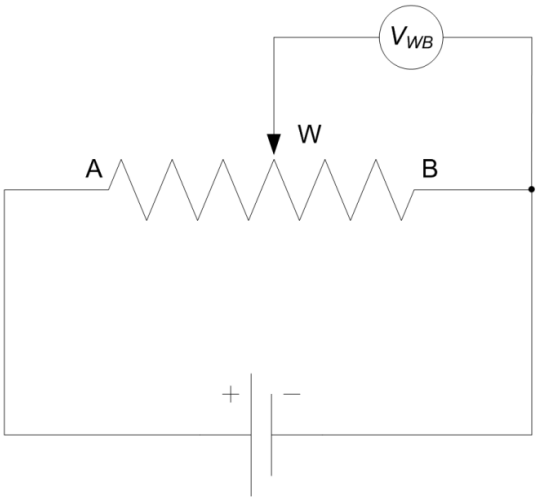

Figure 2: Schematic diagram of the voltage dividing characteristic of a rotary potentiometer.

Rotary Encoders

Similar to rotary potentiometers, encoders can also be used to measure angular position. There are many types of encoders but one of the most common is the rotary incremental optical encoder, shown in Figure 3. Unlike potentiometers, encoders are relative. The angle they measure depends on the last position and when it was last powered. It should be noted, however, that absolute encoders are available.

Figure 3: US Digital incremental rotary optical shaft encoder

The encoder has a coded disc that is marked with a radial pattern. This disc is connected to the shaft of the DC motor. As the shaft rotates, a light from a LED shines through the pattern and is picked up by a photo sensor. This effectively generates the A and B signals shown in Figure 4. An index pulse is triggered once for every full rotation of the disc, which can be used for calibration or homing a system.

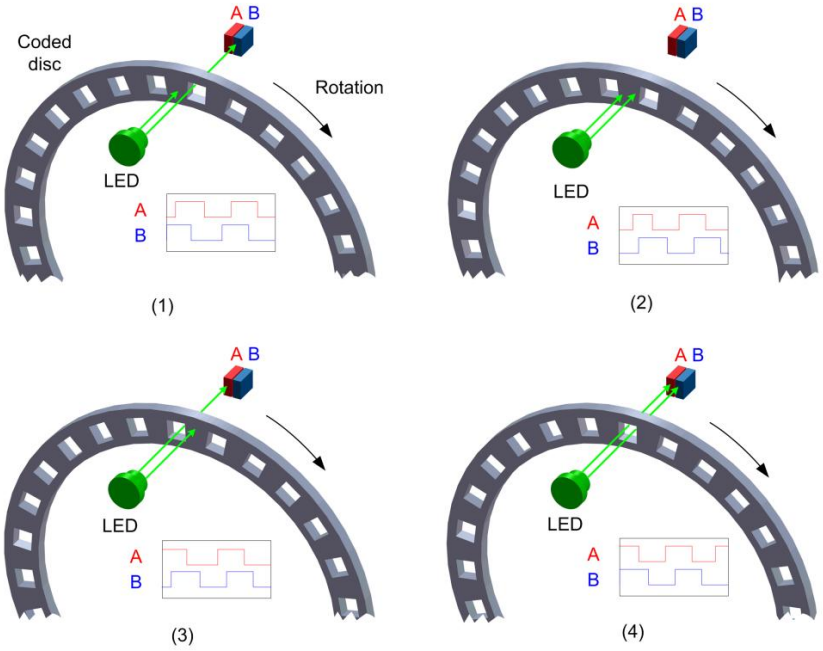

Figure 4: Optical incremental encoder signals

The A and B signals that are generated as the shaft rotates are used in a decoder algorithm to generate a count. The resolution of the encoder depends on the coding of the disc and the decoder. For example, a single encoder with 512 lines on the disc can generate a total of 512 counts for every rotation of the encoder shaft. However, in quadrature decoder as depicted in Figure 4, the number of counts (and thus its resolution) quadruples for the same line patterns and generates 2048 counts per revolution. This can be explained by the offset between the A and B patterns: Instead of a single strip being either on or off, now there is two strips that can go through a variety of on/off states before the cycle repeats. This offset also allows the encoder to detect the directionality of the rotation, Figure 5 demonstrates X1 decoding (only using the rising edges of the A signal), X2 decoding (using the rising and falling edges of the A signal) as well as X4 decoding (using the rising and falling edges of both A and B signals, otherwise known as quadrature decoding).

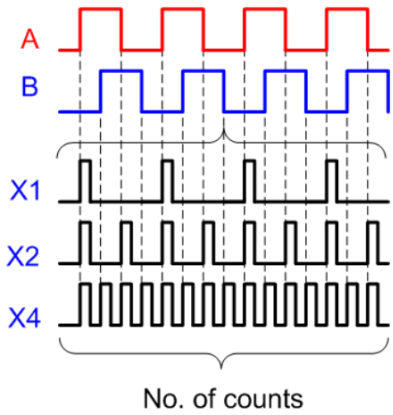

Figure 5: X1, X2 and X4 decoding with optical encoders

Tachometers

A tachometer is a sensor that measures the angular velocity of a shaft. In most applications, a tachometer will be a small DC generator that outputs a DC voltage proportional to the rotational speed of the motor shaft.

In some cases where a true tachometers is not present on a DC motors, an alternate approach can be used. The firmware on the device microcontroller can use an encoder counter to measure rotation in counts or pulses every second.

Dividing the number returned by such a digital tachometer output by the number of encoder counts per revolution, can provide the angular velocity of the motor in revolutions per second.

The same effect can be achieved by taking the derivative of the output from the encoder directly, however using the tachometer reading avoids complications with encoder wrap, that is, when the buffer holding the encoder counts overflows and resets to zero. Also, since the encoder signal is quantized, with discontinuities between the individual values returned, the derivative signal will be very noisy. The tachometer, on the other hand, by effectively averaging the number of counts over a period of time smooths out these discontinuities.

© Quanser Inc., All rights reserved.

QUANSER
INNOVATE · EDUCATE

Solutions for teaching and research. Made in Canada.