Concept Review

Pendulum State Space Model

Why Explore the Pendulum State Space Model?

State space modeling provides a modern and flexible approach to analyzing and designing control systems. Unlike traditional transfer functions, which are limited to single-input, single-output (SISO) systems, state space representation effectively handles multi-input, multi-output (MIMO) systems. By representing a system's inputs, states, and outputs using matrices, it captures the entire dynamic behavior in a compact form. This approach allows us to analyze how a system evolves over time and assess critical properties like controllability and observability, which are essential for designing robust control strategies.

State space models are especially valuable for complex or higher-order systems and enable advanced controller design techniques like pole placement and state feedback. Overall, state space modeling is a foundational tool for modern control engineering, offering a deeper understanding and greater flexibility in system design.

1. Rotary Pendulum Model

The rotary pendulum system, as illustrated in Figure 1.1, is a classic example used to explore state-space modeling in control systems. This system consists of two primary components: a rotary arm and a pendulum link, each contributing to the system's dynamics. The rotary arm, driven by the Qube-Servo 3 actuator, has a length r and a moment of inertia J_r. Its angle θ increases positively when the arm rotates counter-clockwise (CCW), consistent with a positive control voltage $v_m > 0$ applied to the servo.

The pendulum link is connected to the end of the rotary arm. With a total length L_p its center of mass is located at $l = L_p/2$, and its moment of inertia about the center of mass is J_p. The pendulum's angle α is defined as zero when hanging vertically downward and increases positively with CCW rotation.

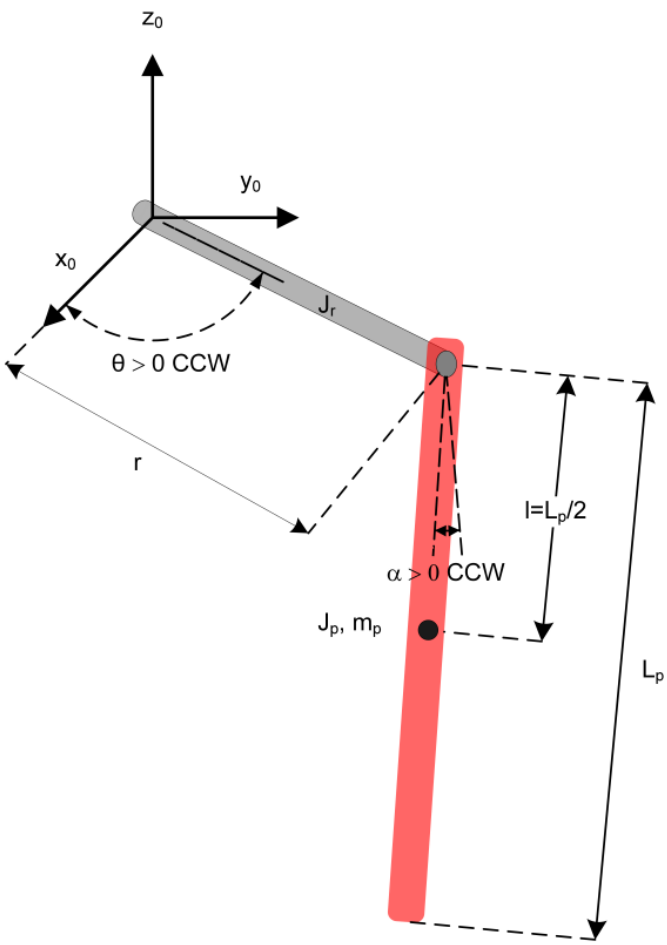

Figure 1. Rotary pendulum model

The equations of motion (EOM) for the pendulum system were developed using the Euler-Lagrange method. This systematic method is often used to model complicated systems such as robot manipulators with multiple joints. The total kinetic and potential energy of the system is obtained, then the Lagrangian can be found. A number of derivatives are then computed to yield the EOMs. The resultant nonlinear EOM are:

$$(J_r + J_p\, sin^2\, \alpha)\ddot{\theta} + m_p lr \cos\alpha\ddot{\alpha} + 2J_p \sin\alpha \cos\alpha\dot{\theta}\,\dot{\alpha} - m_p lr \sin\alpha\dot{\alpha}^2 = \tau - b_r\dot{\theta} \tag{1.1}$$

and

$$J_p\ddot{\alpha} + m_p lr \cos\alpha\ddot{\theta} - J_p \sin\alpha \cos\alpha\dot{\theta}^2 + m_p gl \sin\alpha = -b_p\dot{\alpha} \tag{1.2}$$

Where, $J_r = m_r r^2/3$ is the moment of inertia of the rotary arm about its pivot (rotary arm axis of rotation), and $J_p = m_p L_p^2/3$ is the moment of inertia of the pendulum link about its pivot (pendulum axis of rotation). The viscous damping coefficients acting on the rotary arm and pendulum link are b_r and b_p, respectively. The applied torque at the base of the rotary arm, generated by the servo motor, is given by:

$$\tau = \frac{k_m}{R_m}\left(v_m - k_m\dot{\theta}right\right) \tag{1.3}$$

These equations are derived based on the Furuta Pendulum model, as detailed in the *Pendulum Equations* document by Dr. K. J. Åström, available in the Supplemental Material folder. Note that the equations in that document are for a rotary inverted pendulum, while the equations above represent the pendulum hanging downwards and use different symbols. A complete derivation of the EOMs for a similar rotary pendulum system can be found in the *Rotary Pendulum HTML* file in the *Supplemental Material* folder.

2. Linear Model

When the nonlinear EOM are linearized about the operating point, the resultant linear EOM for the rotary pendulum are defined as:

$$J_r\ddot{\theta} + m_p lr\ddot{\alpha} = \tau - b_r\dot{\theta} \tag{2.1}$$

and

$$J_p\ddot{\alpha} + m_p lr\ddot{\theta} + m_p gl\alpha = -b_p\alpha \tag{2.2}$$

3. Linear State Space Model

The linear state-space equations for a dynamic system are expressed as:

$$\dot{x}(t) = Ax(t) + Bu(t) \tag{3.1}$$

and

$$y(t) = Cx(t) + Du(t) \tag{3.2}$$

Here, x represents the state variable vector $(n \times 1)$, u is the control input vector $(r \times 1)$, and y is the output vector $(m \times 1)$. The matrices A, B, C, and D define the system dynamics: A is the system matrix $(n \times \mathrm{n})$, B is the input matrix $(n \times r)$, C is the output matrix $(m \times n)$, and D is the feed-forward matrix $(m \times r)$. A block diagram of these state-space equations is shown in Figure 2.

For the rotary pendulum system, the state and output variables are defined as:

$$x(t) = [\theta(t) \quad \alpha(t) \quad \dot{\theta}(t) \quad \dot{\alpha}(t)]^T \tag{3.3}$$

and

$$y(t) = [\theta(t) \quad \alpha(t)]^T \tag{3.4}$$

The state vector $x(t)$ includes all the variables required to model the system's dynamics, while the output vector $y(t)$ consists of the state variables that are directly measurable.

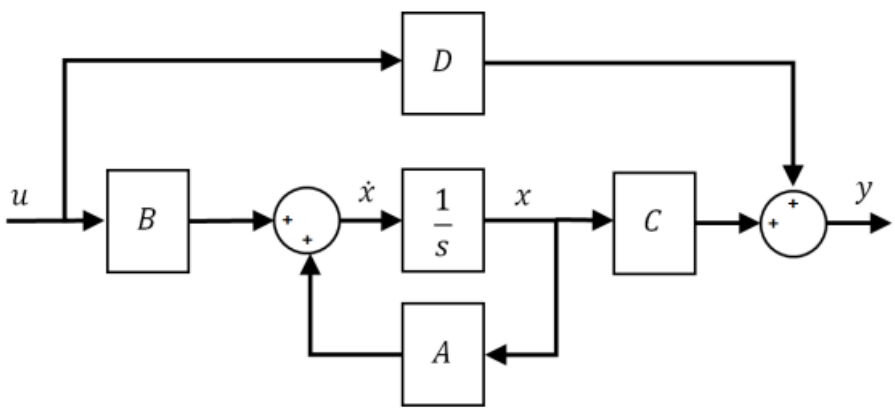

Figure 2. Block diagram of state-space system

© Quanser Inc., All rights reserved.

QUANSER
INNOVATE · EDUCATE

Solutions for teaching and research. Made in Canada.