QUANSER
INNOVATE·EDUCATE

Concept Review

Sensor Fusion

Why Learn Sensor Fusion?

All sensors have their upsides and downsides. LiDAR is accurate with measuring depth but comes with a steeper price tag. Radar is cheap and great for tough weather conditions but can't "see" that the object it is looking at is a stop sign. Cameras provide high levels of environment information but are prone to difficulties in changing lighting conditions or weather and require lots of memory for image processing.

Sensor fusion brings the data for each of the sensor types together through software algorithms to create the most comprehensive model possible. With vehicles, for example, how do we get a good idea of their surrounding objects? Fusing data from multiple sensors such as multiple radars improve perception by taking advantage of partially overlapping fields of view. As more than one sensor detects the same objects at the same time, information can be overlapped or fused, increasing the probability and reliability of the position of that object with respect to the vehicle. This creates a more accurate and reliable representation of the environment.

Introduction to Sensor Fusion

Sensor fusion involves combining measurement information from a variety of sensors to achieve measurements of higher quality (less noise, faster rate etc.). There are many techniques available, including Kalman filters, Bayesian Networks, Convolutional Neural Networks and Complementary filters. One popular method is a **Complementary Filter** due to its simplicity and ease of implementation.

Complementary Filters

Basics

Complementary filters make use of two common filtering techniques, high pass and low pass filters. For more information on how to filter sensor information please refer to Concept Review - Filtering. The magnitude of a signal versus an input frequency can be visualized using a Bode plot shown in Figure 1, that demonstrates the magnitude plot of a low pass and high pass filter with the same frequency (in this case, 100 rad/s).

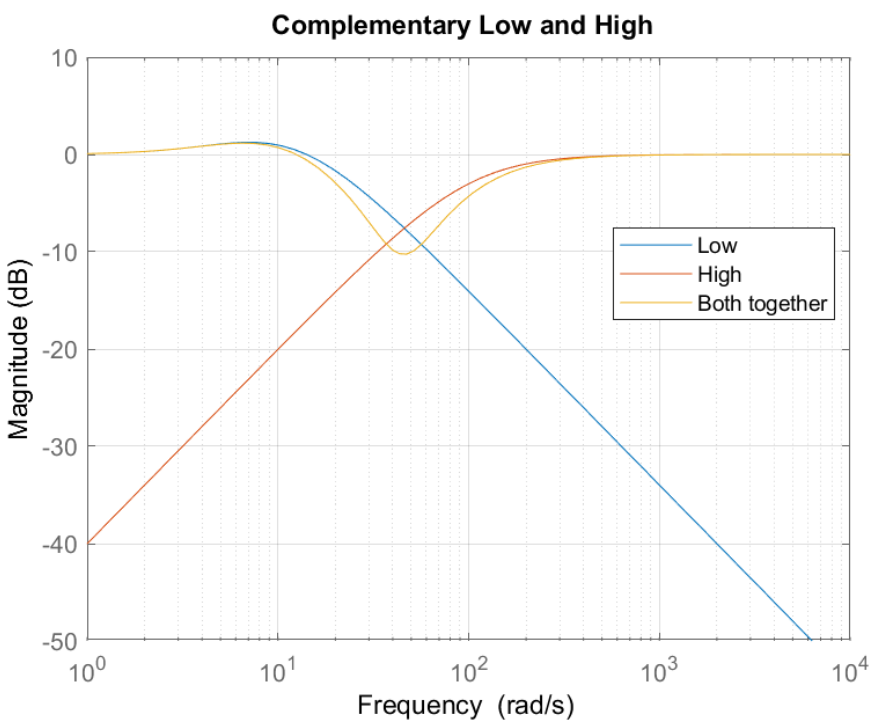

Figure 1: Bode plot showing a low and high pass filter with the same frequency.

Looking at the high-pass and low-pass filter signal magnitudes for a value of 100 rad/s frequency we get 0 dB which implies the signal is unchanged, As such, the two filters are 'complementary' in nature. This is what makes up a complementary filter.

This relationship can also be described with the equation,

$$\frac{\omega_{co}}{x+\omega_{co}}x + \frac{s}{s+\omega_{co}}x = \left(\frac{\omega_{co}}{s+\omega_n} + \frac{s}{s+\omega_{co}}\right)x = x \tag{1}$$

Given two filters $H_{LPF}(s)$ and $H_{HPF}(s)$, they are said to be complementary, if they satisfy the following equation,

$$H_{LPF}(s) + H_{HPF}(s) = 1 \tag{2}$$

When looking at combining different signals for fusion, equation 2 needs to be generalized to the following:

$$H_{LPF}(s)p(s) + H_{HPF}(s)q(s) = u(s) \tag{3}$$

where $p(s)$ and $q(s)$ are two input signals and $u(s)$ is the resulting combined signal. Note that the process noise isn't considered for any of the signals. When using complementary filters for sensor fusion, this equation is used becomes:

$$H_{LPF}(s)\frac{\dot{x}(s)}{s} + H_{HPF}(s)q(s) = x_e(s) \tag{4}$$

where $x(s)$ is a slower direct measurement signal and $\dot{x}(s)$ is a faster signal measuring the derivative of $x(s)$. To maintain the same SI units for the two sensors being combined, we integrate $\dot{x}(s)$ using the laplace function 1/s. The output $x_e(s)$ has both the fast and accurate characteristics of the input depending on how the transfer functions $H_{LPF}(s)$ and $H_{HPF}(s)$ are tuned. In practice, the slower measurement data is typically filtered with a low-pass filter that removes high frequency noise from the measurement, where the faster measurement is typically filtered with a high-pass filter that removes low frequency drift or bias. Figure 2 visually shows such a filter.

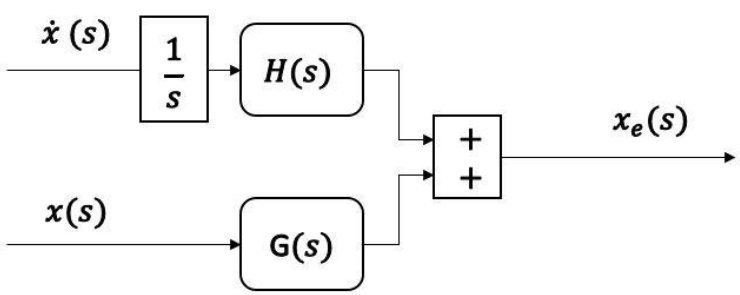

Figure 2: Complementary filter design

Implementation

An example implementation of the complementary filter is shown in Figure 3. The equations that relate $x_e(s)$, $\dot{x}(s)$ and $x(s)$ to the intermediary terms are,

$$\begin{aligned} x_e(s) &= \frac{a}{s} \\ a &= \dot{x}(s) - K_p b - \frac{K_i b}{s} \\ b &= x_e(s) - x(s) \end{aligned} \tag{5}$$

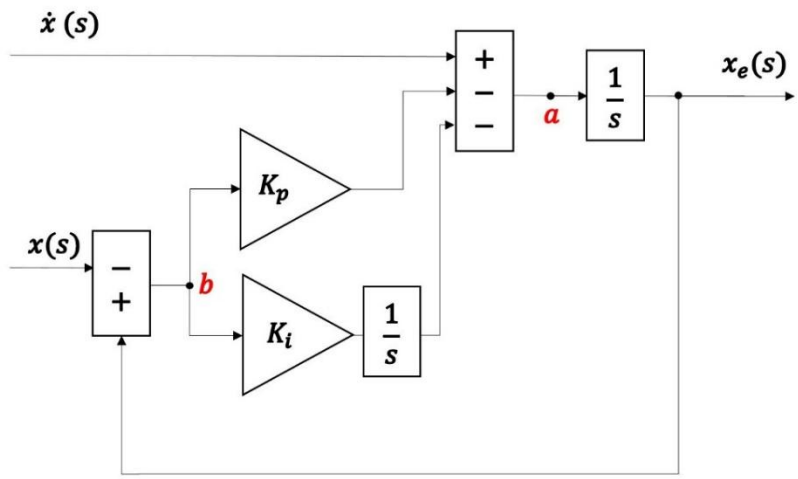

Figure 3: Complementary filter implementation

Solving equation 5 to eliminate a and b yield,

$$x_e(s) = \frac{s^2}{s^2 + K_p s + K_i}\frac{\dot{x}(s)}{s} + \frac{K_p s + K_i}{s^2 + K_p s + K_i}x(s) \tag{6}$$

where,

$$H(s) = \frac{s^2}{s^2 + K_p s + K_i}$$
$$G(s) = \frac{K_p s + K_i}{s^2 + K_p s + K_i} \tag{7}$$

Notice that equation 6 are second-order high-pass and low-pass filters respectively. This equation resembles equation 4. Thus, complementary filters for sensor fusion involve a high-pass filter on the integral of a rate signal $\dot{x}$ to capture the fast frequency motion dynamics, while passing the low-frequency corrections from an approximation x to achieve a signal estimate that does not drift and has inherently less noise.

Depending on the values of K_p and K_i, the filter characteristics of $H(s)$ and $G(s)$ can be adjusted. In general, increasing K_p increases the correction to the rate signal $\dot{x}(s)$, thereby shifting the complementary filter's output estimate to rely more on the corrective signal $x(s)$ instead. Increasing K_i corrects the rate signal based on an accumulated error between the corrective signal $x(s)$ and the estimate over time.

Conclusion

Sensor fusion allows us to improve overall accuracy with our data measurements and be able to calculate or estimate properties that we otherwise couldn't directly measure on their own through combining data. Through tuning specific values, we can correct and reduce errors in our incoming signals. Sensor fusion that then be used in a wide array of applications including video surveillance, remote sensing, autonomous systems, etc. One common application for sensor fusion is with state estimation. To see how sensor fusion gets used in state estimation, see Concept Review - State Estimation.

© Quanser Inc., All rights reserved.

QUANSER
INNOVATE · EDUCATE

Solutions for teaching and research. Made in Canada.