QDrone 2 – Hardware Test

# LEDs

## What to expect in the LEDs Test?

This document will guide you through running the tests to confirm user programmable LEDs are working properly and how to change them if needed for your application.

## QDrone 2 LEDs

QDrone 2 has two user programmable LEDs at the front of the drone marked as LED1 and LED 2 as shown in figure 1. During most flight models they are set up to show the state of the drone, however, they can be changed for whatever the user deems fit. Each of the RGB LEDs can not only just be on or off but can be defined to be different brightness levels.

Figure 1. Location of user programmable LEDs

## LED Tests – MATLAB/Simulink

Open the QD2_LED_2021a.slx file from the same folder containing this file.

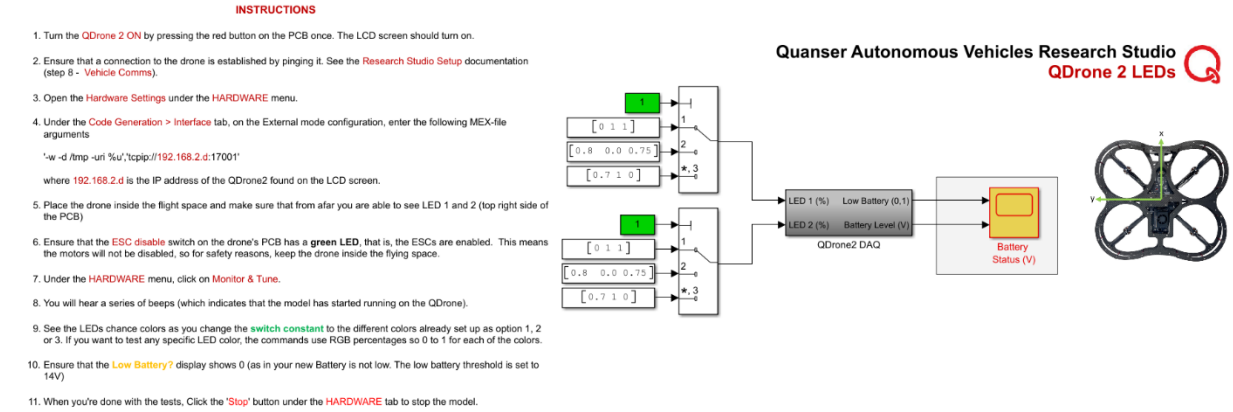


Figure 2. Motors Measurment model

Follow the instructions on the left of the the Simulink model (figure 2). For the LEDs to work, the ESC switch must be enabled (green light). This means that the motors are not disabled, for safety, remove props or keep the drone inside the test flight area.

Change the input to the switch in the model highlighted in green. This will change the LEDs as one of the 3 specified colors in RGB when the green input is changed between 1, 2 and 3. This will validate that the LEDs are working correctly and can be changed individually.

Feel free to change the constant block values to any other set of RGB values to test it out. Values for RGB of each LED can be any number between 0 and 1.