QUANSER
INNOVATE·EDUCATE

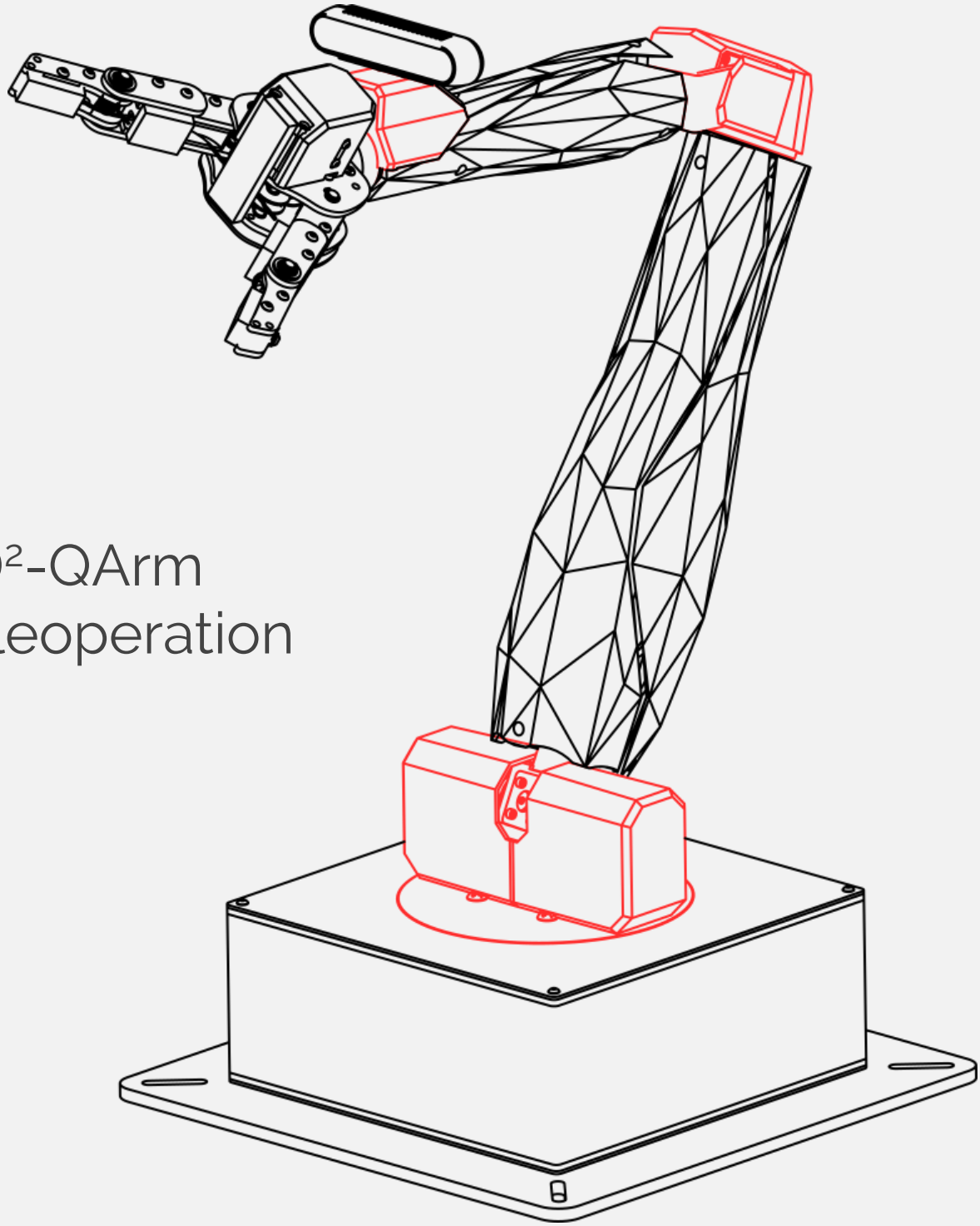

HD²-QArm Teleoperation

User Manual

V1.0 - 12th May, 2023

© 2023 Quanser Inc., All rights reserved.

Quanser Inc.
119 Spy Court
Markham, Ontario
L3R 5H6
Canada

info@quanser.com
Phone: 19059403575
Fax: 19059403576
Printed in Markham, Ontario.

For more information on the solutions Quanser Inc. offers, please visit the web site at:
http://www.quanser.com

This document and the software described in it are provided subject to a license agreement. Neither the software nor this document may be used or copied except as specified under the terms of that license agreement. Quanser Inc. grants the following rights: a) The right to reproduce the work, to incorporate the work into one or more collections, and to reproduce the work as incorporated in the collections, b) to create and reproduce adaptations provided reasonable steps are taken to clearly identify the changes that were made to the original work, c) to distribute and publicly perform the work including as incorporated in collections, and d) to distribute and publicly perform adaptations. The above rights may be exercised in all media and formats whether now known or hereafter devised. These rights are granted subject to and limited by the following restrictions: a) You may not exercise any of the rights granted to You in above in any manner that is primarily intended for or directed toward commercial advantage or private monetary compensation, and b) You must keep intact all copyright notices for the Work and provide the name Quanser Inc. for attribution. These restrictions may not be waved without express prior written permission of Quanser Inc.

FCC Notice This device complies with Part 15 of the FCC rules. Operation is subject to the following two conditions: (1) this device may not cause harmful interference, and (2) this device must accept any interference received, including interference that may cause undesired operation.

Industry Canada Notice This Class A digital apparatus complies with Canadian ICES-003. Cet appareil numérique de la classe A est conforme à la norme NMB-003 du Canada.

Waste Electrical and Electronic Equipment (WEEE)

This symbol indicates that waste products must be disposed of separately from municipal household waste, according to Directive 2002/96/EC of the European Parliament and the Council on waste electrical and electronic equipment (WEEE). All products at the end of their life cycle must be sent to a WEEE collection and recycling center. Proper WEEE disposal reduces the environmental impact and the risk to human health due to potentially hazardous substances used in such equipment. Your cooperation in proper WEEE disposal will contribute to the effective usage of natural resources.

CE Compliance CE

This product meets the essential requirements of applicable European Directives as follows:

- 2006/95/EC; Low-Voltage Directive (safety)
- 2004/108/EC; Electromagnetic Compatibility Directive (EMC)

Warning: This is a Class A product. In a domestic environment this product may cause radio interference, in which case the user may be required to take adequate measures

Caution

This equipment is designed to be used for educational and research purposes and is not intended for use by the public. The user is responsible to ensure that the equipment will be used by technically qualified personnel only. While the end-effector board provides connections for external user devices, users are responsible for certifying any modifications or additions they make to the default configuration.

Table of Contents

Table of Contents 3

A. Introduction 4

B. Setup 4

Single PC Configuration 4

Dual PC Configuration 4

On the Host PC: 5

On the Remote PC: 5

C. Operation 6

A. Introduction

This demo demonstrates teleoperation of a QArm with haptic feedback using an HD². The demo can be run with both devices connected to the same PC, or two different PCs connected over a network. It Is also possible to run the demo using a virtual QArm using Quanser Interactive Labs (QLabs). It is assumed that before running this demo, you have already read the user guides for the QArm and HD². and are familiar with the function of both devices.

B. Setup

The demo consists of three Simulink models. All three models must be running simultaneously for the demo to work. The function of each model is described in Table 1:

Table 1: Required Simulink files with descriptions.

Model Name	Model Description
`HD2_Driver_PY_v3`	• Performs low-level control and communication with the HD². • Receives force feedback commands from `HD2_QArmTeleopClient` over stream. • Sends rate command information to `HD2_QArmTeleopClient` over stream.
`HD2_QArmTeleopClient`	• Acts as an interface between the HD² and the QArm • Talks to `HD2_Driver_PY_v3` and `QArm_TeleopServer` over stream. • Displays the camera stream received from the QArm.
`QArm_TeleopServer`	• Receives rate commands from `HD2_QArmTeleopClient` to control the QArm. • Sends camera feed and joint currents to `HD2_QArmTeleopClient` over stream.

Depending on the desired setup configuration (single or dual PC), you may need to modify some of the model settings. The detailed setup instructions for each configuration are provided below.

Note: If you Intend on using a virtual rather than a physical QArm, use the `QArm_TeleopServer_Virtual` model file Instead of `QArm_TeleopServer`. Also, the "QArm Workspace" Inside QLabs must be running before starting the demo. All other Instructions for running the demo are the same as for the physical arm.

Single PC Configuration

If you would like to run the demo using a single PC, no addition configuration of the models is required. To get started, follow these steps:

1. Ensure the HD² and QArm are connected to the host PC and powered on.
2. Open Matlab and navigate to the folder containing the demo files.
3. Open and build each of the three `.slx` model files.
4. Start all three models and leave them running (start order does not matter).

Dual PC Configuration

If you would like to run the demo using two separate PCs, you will need to do some additional setup to ensure the two PCs can talk to each other. The intended setup is to have the HD² connected to the first PC (referred to as the **host PC**) and the QArm connected to the second PC (referred to as the **remote PC**). Note: these instructions assume you know the IP address of both PCs. If you don't, you can find a PC's IP address using the `ipconfig` command inside a command prompt on windows. Ensure both PCs are on the same network and can ping each other's IP addresses.

On the Host PC:

1. Open `HD2_QArmTeleopClient.slx.`
2. Modify the two red "string constant" blocks (highlighted in Figure 1), replacing "localhost" with the IP address of the remote PC.
3. Save and build `HD2_QArmTeleopClient.slx.`
4. Open and build `HD2_Driver_PY_v3.slx.`
5. Ensure the HD² is connected and powered on.
6. Start both models and leave them running (start order does not matter).

On the Remote PC:

1. Open `QArm_TeleopServer.slx`
2. Modify the two red "string constant" blocks (highlighted in Figure 2), replacing "localhost" with the IP address of the host PC.
3. Save and build `QArm_TeleopServer.slx.`
4. Ensure the QArm is connected and powered on.
5. Start `QArm_TeleopServer` and leave it running.

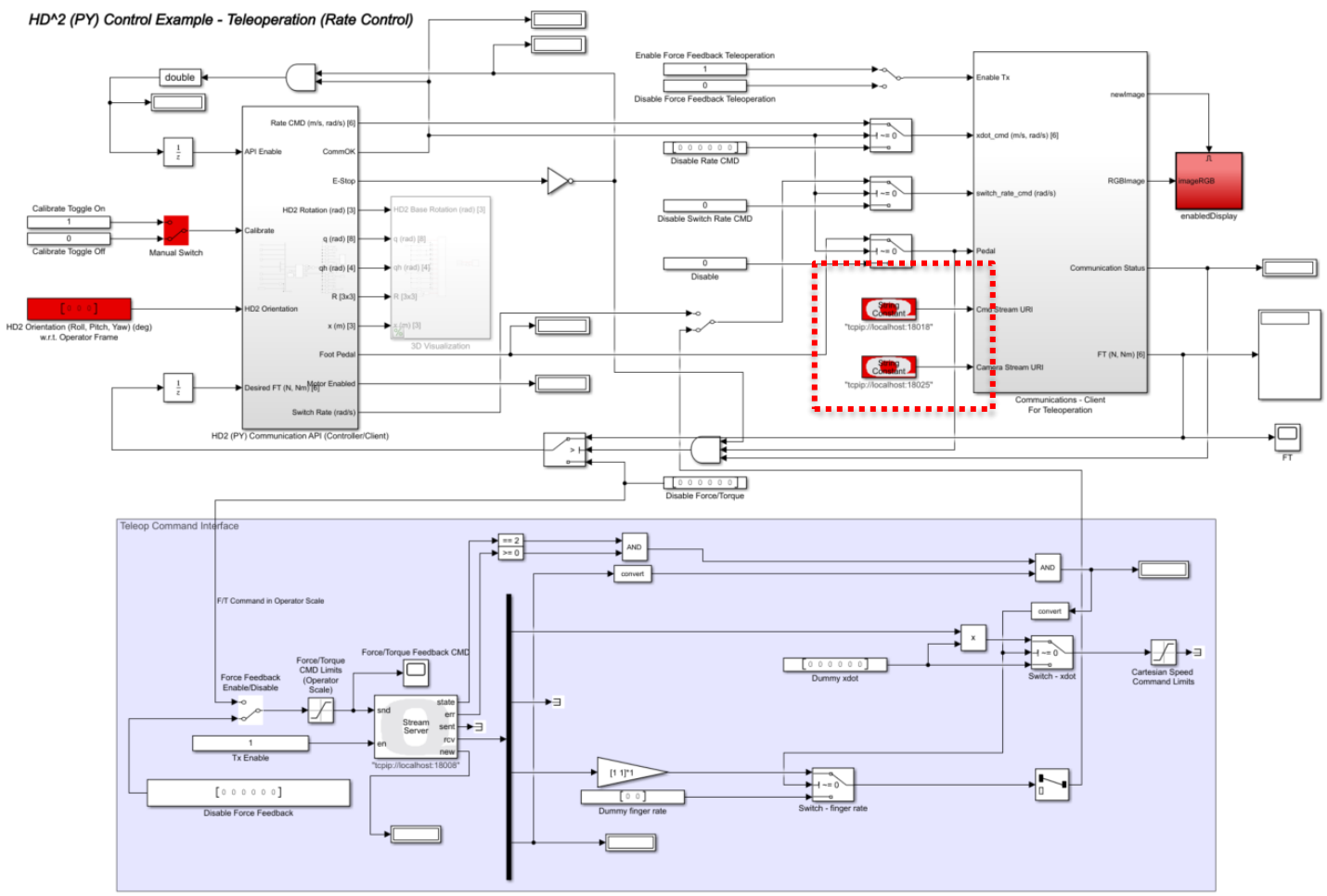

Figure 1: `HD2_QArmTeleopClient` block diagram with string constant blocks highlighted.

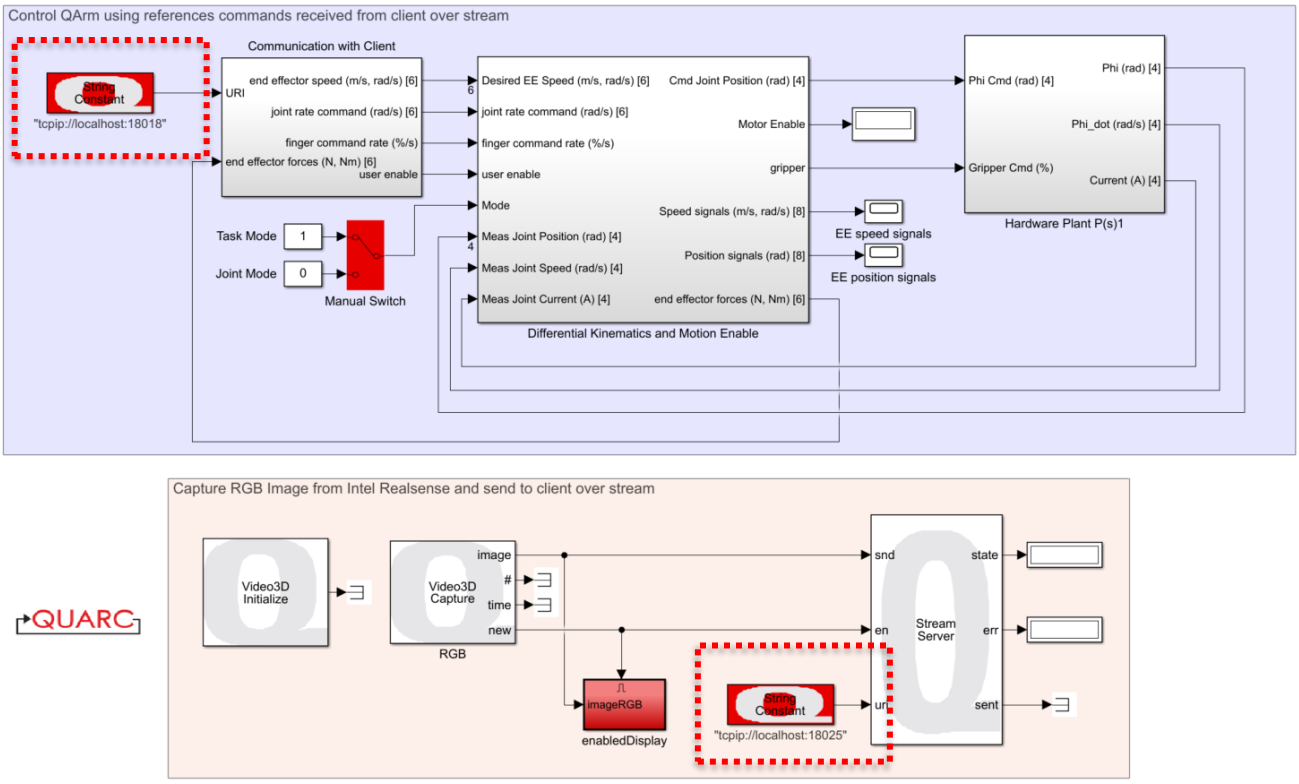

Figure 2: `QArm_TeleopServer` block diagram with string constant blocks highlighted.

C. Operation

After following the setup instructions in Section B, you are now ready to operate the QArm using the HD². The controls for using teleoperation are as follows:

- Manually moving the HD² end-effector produces a similar motion for the QArm.
- Movement of the arm is enabled using the foot pedal.
- The QArm gripper can be closed by pressing and holding the space button on the host PC.

For best results, it is important to calibrate the HD² first and reorient the HD²'s coordinate frame orientation as needed. The HD² can be calibrated as follows:

1. Open `HD2_QArmTeleopClient` on the host PC (while it is running).
2. Place the HD² end-effector in the calibration pose shown in Figure 3 (a).
3. Set the red manual switch in `HD2_QArmTeleopClient` (shown in Figure 3 (b)) to pass through 1.
4. Set the red manual switch in `HD2_QArmTeleopClient` to pass through 0 (double click).

To reorient the HD²'s coordinate frame orientation, you can update the values of the red constant block titled "HD2 Orientation …" in `HD2_QArmTeleopClient`, shown in Figure 3 (b). The default orientations for both the QArm and HD² are shown in Figure 4.

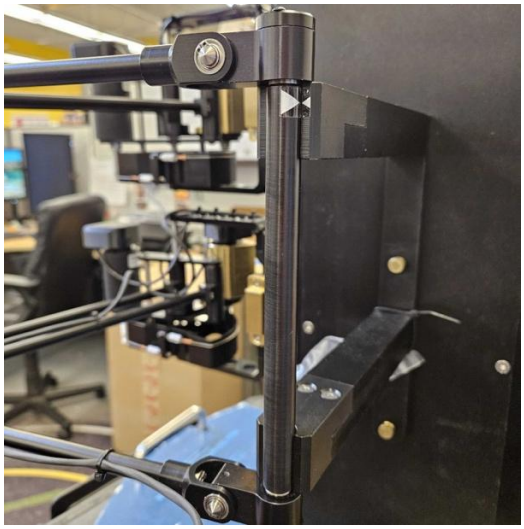

(a) Calibration pose for the HD²

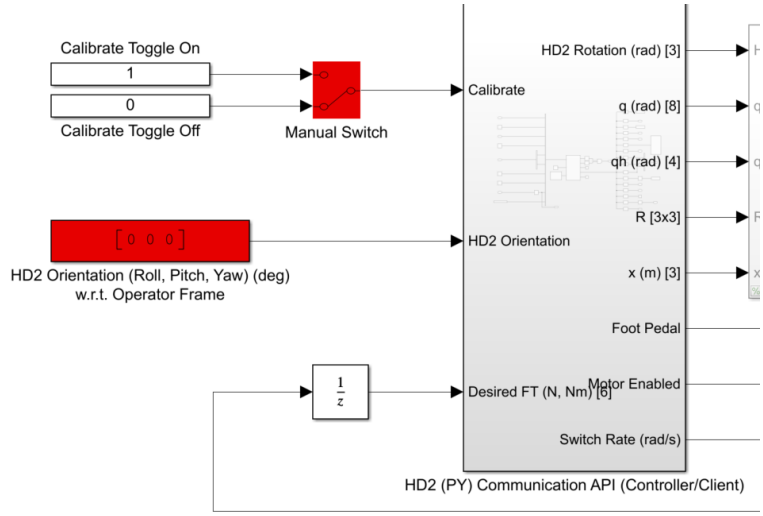

(b) Zoomed-in screenshot of HD2_QArmTeleopClient.slx

Figure 3: Calibration of the HD2

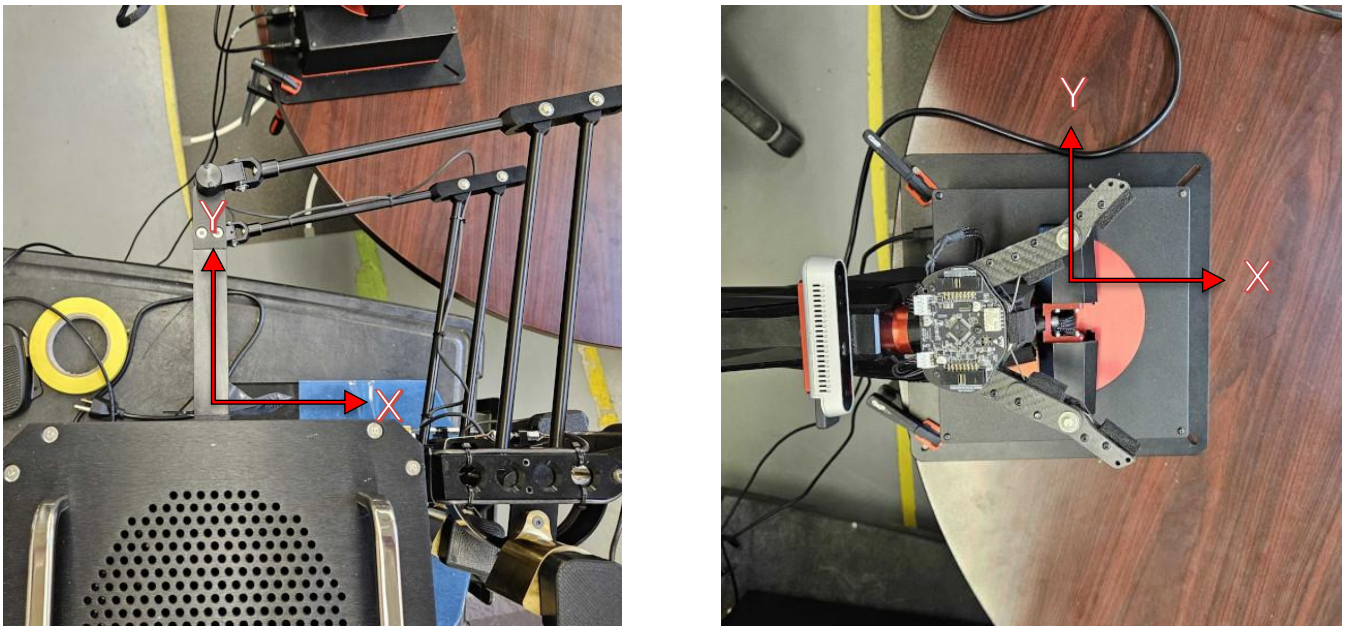

Figure 4: Coordinate frame orientations for the HD2 and QArm

© Quanser Inc., All rights reserved.

QUANSER
INNOVATE · EDUCATE

Solutions for teaching and research. Made in Canada.