Lab Guide

LIDAR Point Cloud

Content Description

The following document describes a LiDAR point cloud implementation in either python or MATLAB software environments.

Lab Guide 1

Running the example 2

Details 3

Running the Example 5

Details 5

MATLAB

In this example, we will capture LIDAR data from the RP LIDAR A2 on the QCar platform, send the data to a polar plot, and generate a point cloud map. The process is shown in Figure 1.

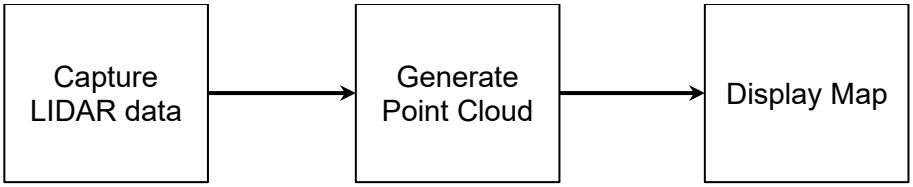

Figure 1. Component diagram

In addition, a timing module will be monitoring the entire application's performance. The Simulink implementation is displayed in Figure 2 below.

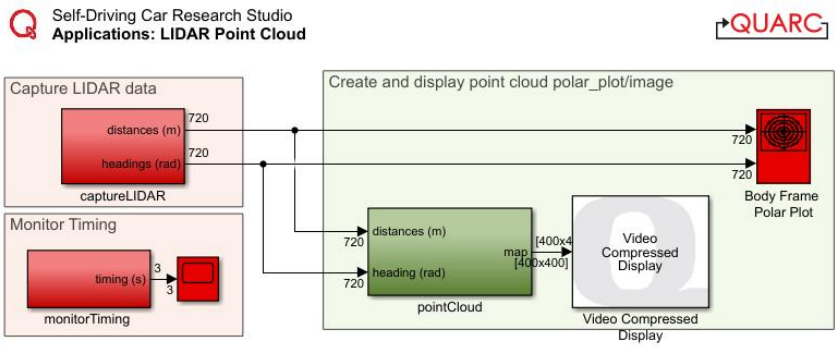

Figure 2. Simulink implementation of Lidar Point Cloud

Running the example

1. Check User Manual – Software Simulink for details on deploying Simulink models to the QCar as applications.
2. As your room size may vary, change the maximumDistance (m) parameter within the pointCloud subsystem accordingly, up to a maximum of 4m (corresponding to an 8 x 8 m room). Figure 3 shows the typical output expected when running this example.

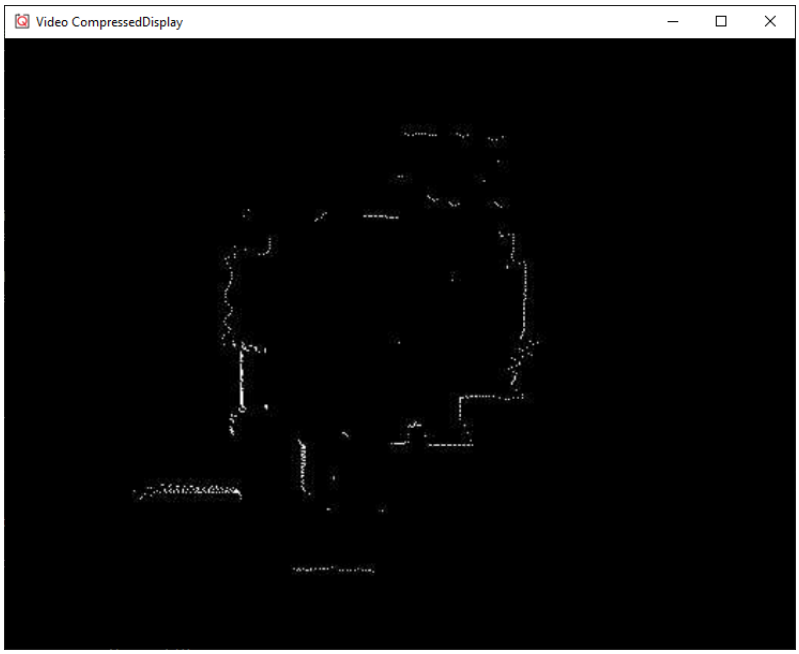

Figure 3. Point cloud map generated in a room.

Details

1. Capturing LIDAR data

The RP LIDAR A2 reads data in a clockwise manner, starting from a position opposite to the data cable attached to it. On the QCar platform, this corresponds to the +y axis. To correct this, the **captureLIDAR** subsystem corrects the order of the data to start at the front and orient counterclockwise to follow standard convention in the **bodyFrameAdjustmentOnCapture** function.

2. Saturating the distances data meaningfully

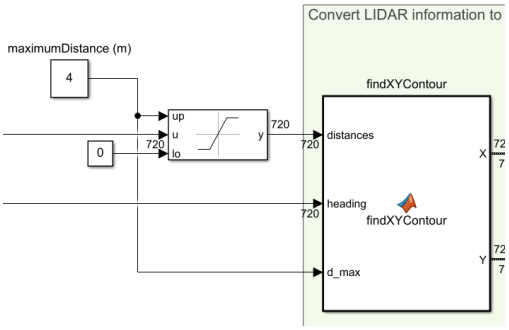

To limit the scope of the data to a range, the **distances** data is dynamically saturated using the **maximumDistance** parameter. The **findXYContour** function then converts the **distance/heading** data pairs to **X Y** pairs. However, we would like the **X Y** points corresponding to the **maximumDistance** to not show up within the point cloud itself, as they simply correspond to a maximum range and not physical obstacles. To do so, the **findXYContour** also drops data points that are equal to the **maximumDistance** parameter.

3. Generating the point cloud

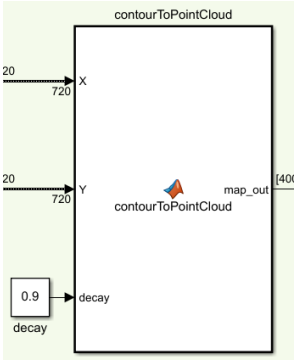

This function first decays the existing map to 90%, thereby slowly erasing older data. The **X Y** data points in meters are converted to pixel scale **pX** and **pY** using a **gain** of 50 px/m for a map of size **dim** up to 400 pixels wide and tall (or 8m x 8m). Check out the documentation of MATLAB's **sub2ind** for information on how the (row, col) pairs in (**pX**, **pY**) are converted to indices where the point cloud map will be set to **1**. Adjust the **decay** parameter to change the rate of update of the map. Note that you can do this online while the application is deployed.

4. Performance considerations

To improve performance, we only create a blank map on the first call by the use of persistent MATLAB variables. The variable map_internal holds its value at any given iteration into the next call. At the end of the function, the mapOut is updated and then displayed.

Python

In this example, we will capture LIDAR data from the RP LIDAR A2 on the QCar platform, and generate a point cloud map. The process is shown in Figure 4.

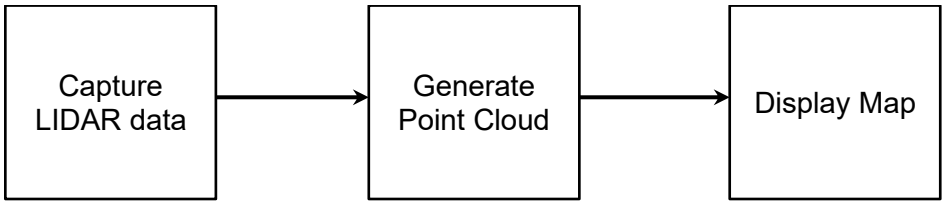

Figure 4. Component diagram

Running the Example

Check User Manual – Software Python for details on deploying python scripts to the QCar platform. As your room size may vary, change the parameters **dim** and **gain** as you see fit. Figure 5 shows the typical output expected when running this example (via XLaunch).

Figure 5. Point cloud map generated in a room.

Details

1. Capturing LIDAR data

   The data available using the LIDAR class is already adjusted to be presented counterclockwise starting at the positive X axis of the lidar frame (right direction). The LIDAR class object has two attributes, distances and angles, that correspond to the

data. The first line below shows the initialization step, and the second shows how to read the data.

```
myLidar = Lidar(
    type='RPLidar',
    numMeasurements=numMeasurements,
    rangingDistanceMode=lidarMeasurementMode,
    interpolationMode=lidarInterpolationMode)

myLidar.read()
```

2. Converting distances/angles to x y

   After heading angles are converted from lidar frame to QCar body frame, the **distance/heading** data pairs are converted to **x y** pairs (in meters) using the lines below, and then to **pX pY** pairs (in pixels) for the image.

```
x = myLidar.distances[idx]*np.cos(anglesInBodyFrame[idx])
y = myLidar.distances[idx]*np.sin(anglesInBodyFrame[idx])

pX = (sideLengthScale/2 - x*pixelsPerMeter).astype(np.uint16)
pY = (sideLengthScale/2 - y*pixelsPerMeter).astype(np.uint16)
```

3. Generating the point cloud

   Note that the **map** is set to zeros at the beginning.

```
map = np.zeros((dim, dim), dtype=np.float32)
```

   It is then decayed slowly using the **decay** parameter at the start of the loop.

```
map = decay*map
```

   A line below updates the **map** at the locations **pX pY** near the end of the loop.

```
map[pX, pY] = 1
```

4. Performance considerations

   To improve performance, we only create a blank map when initializing the code. Within the main loop, older map data is slowly decayed. The module **opencv** provides the **waitKey()** method for pausing in this case. See User Manual – Software Python for more information on timing.