# Aero 2 Lab Procedure
# Pitch Parameter Estimation

## Setup

1. Make sure the Aero 2 has been tested as instructed in the Quick Start Guide.
2. Launch MATLAB and browse to the working directory that includes the Simulink models for this lab.
3. Make sure the Aero 2 is configured as the 1 DOF pitch-only system:
    a. Unlock the pitch axis and lock the yaw axis.
    b. Both rotors are horizontal.
    c. Adjust weights on rotors so the Aero 2 body sits level.
4. Connect the USB cable to your PC/laptop.
5. Connect the power and turn the power switch ON. The Aero base LED should be red.

## Capturing Pitch Angle Response

The Simulink model below applies a 7V step to the front rotor, i.e. motor 0, for 60 sec. The model continues to run for another 120 sec to capture the free-oscillation response. The measured motor voltage, rotor angular speed, and the pitch angle are saved in the MATLAB data file *DataPitchStep.mat*. The saved data from this file can be loaded to perform your analysis and find the model parameters.

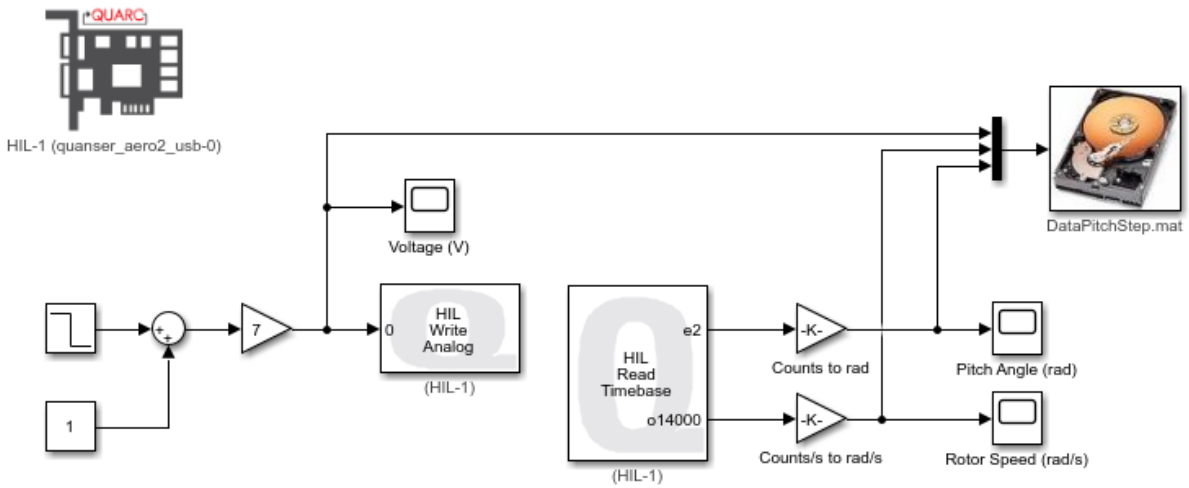


Figure 1 – q_aero2_pitch_step.slx Simulink model

Follow the instructions below to apply a step and measure the corresponding step and free-oscillation response:

1. Open the *Aero2_pitch_parameter_estimation_student.mlx* MATLAB Live Script,
2. Open the the *q_aero2_pitch_step.slx* Simulink model as in Figure 1 above.

3. Build and run the *q_aero2_pitch_step.slx* Simulink model in QUARC to apply the step to the front rotor, i.e., motor 0. The model will stop automatically after 180 sec. The response should look similar as shown in Figure 2.

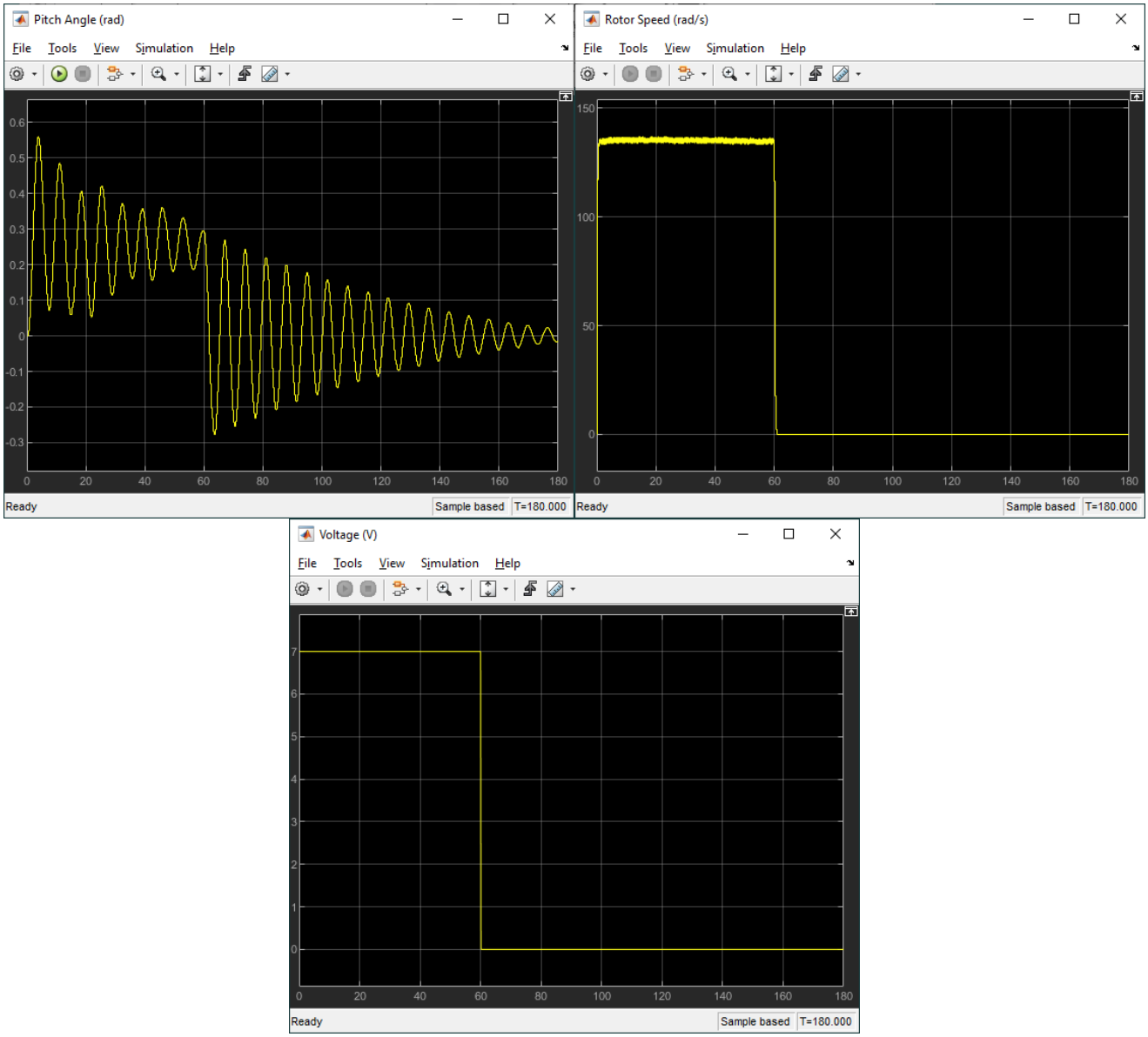


Figure 2 – Aero 2 step response

4. Plot the response of the pitch angle, rotor speed, and motor voltage in a MATLAB figure. See the example code in the Live Script. Attach the response.

## Measure the Stiffness and Viscous Damping

The stiffness and viscous damping can be found by measuring the natural frequency and damping ratio of the free-oscillation response that was captured.

1. Measure the natural frequency, $\omega_n$, of the free-oscillation response, i.e., the response after the step is no longer applied (60 s to 180 s). Because the damping is low, assume the damped and undamped natural frequency are equivalent, i.e., $\omega_n = \omega_d$. To do this, measure the time of the peak or maximum amplitude to the 1st and nth oscillation.

**Hint**: You can use the *Cursor Measurements* tool in the Simulink Scopes or take data points directly from the MATLAB figure to take your measurements.

2. Measure the damping ratio, $\zeta$, To do this, measure the peak amplitude of the 1st and nth oscillation of the free-oscillation response.

3. Calculate the stiffness and viscous damping based on the natural frequency and damping ratio you measured.

4. Complete the sample code given in the Live Script.

## Measure the Thrust Gain

The thrust force parameter can be found by measuring the steady-state pitch angle when a step command is applied.

1. Measure the steady-state pitch angle, $\theta_{ss}$, of the step response and the input rotor speed amplitude, $\omega_0$.

2. Calculate the thrust force gain parameter, $K_{pp}$, based on these measurements.

3. Complete the sample code given in the Live Script.

## Model Validation

In this section, the model of the Aero 2 using the parameters you identified is compared with the actual hardware response to see how well the model represents the actual system, The *q_aero2_pitch_model_val.slx* Simulink model shown below runs both the hardware and the model in parallel in QUARC. This allows the model response to be compared with the hardware.

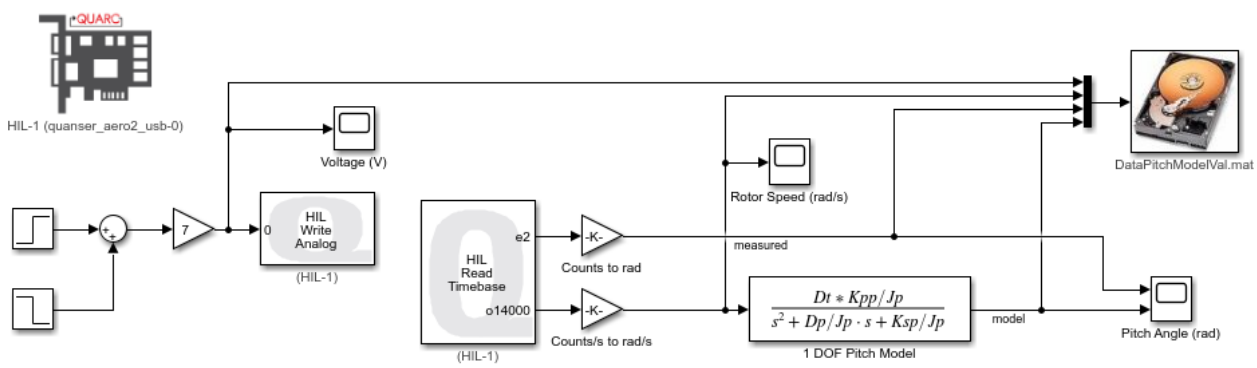


Figure 3 – q_aero2_pitch_model_val.slx Simulink model

Follow these instructions to compare the model with the hardware response:

1. Open the *q_aero2_pitch_model_val.slx* Simulink model.

2. See the *Model Validation* section in the Live Script. Make sure all the stiffness, viscous damping, and thrust force gain parameters you identified have been loaded in the MATLAB workspace as `Dp`, `Ksp`, and `Kpp` as given in the Live Script.

3. Build and run the *q_aero2_pitch_model_val.slx* Simulink model in QUARC.

4. Attach a MATLAB figure showing the response of the pitch angle of both the hardware and model as well as the measured rotor speed and input voltage. See the example code in the Live Script to create this plot.

5. Does the model with the parameters you found, match the hardware response? Give one reason why there could be a mismatch, i.e., why the model does not represent the system.

6. Close the Simulink model.

7. Turn off the power on the Aero 2.