Aero 2 Lab Procedure
Measuring and Filtering

Setup

1. Make sure the Aero 2 has been tested as instructed in the Quick Start Guide.
2. Launch MATLAB and browse to the working directory that includes the Simulink models for this lab.
3. Configure the Aero 2 in the 1 DOF pitch-only system:
    a. Unlock the pitch axis and lock the yaw axis.
    b. Both rotors are horizontal.
    c. Adjust weights on rotors so the Aero 2 body sits level.
4. Connect the USB cable to your PC/laptop.
5. Connect the power and turn the power switch ON. The Aero 2 base LED should be red.

Accelerometer Filtering

1. Open the project *q_aero2_measurement_filtering.mdl* via MATLAB. It should resemble Figure 1. This model is a PID controller for the thrusters of the Aero 2.
2. Run the QUARC controller. Wait for the model to stop running (30 seconds). As the Aero 2 is stationary during the first 5 seconds, the X-axis acceleration should be zero. Thus, any non-zero measurements can be attributed to noise. Visually, what is the peak amplitude of the noise signal during this period (from the X Acceleration graph)?

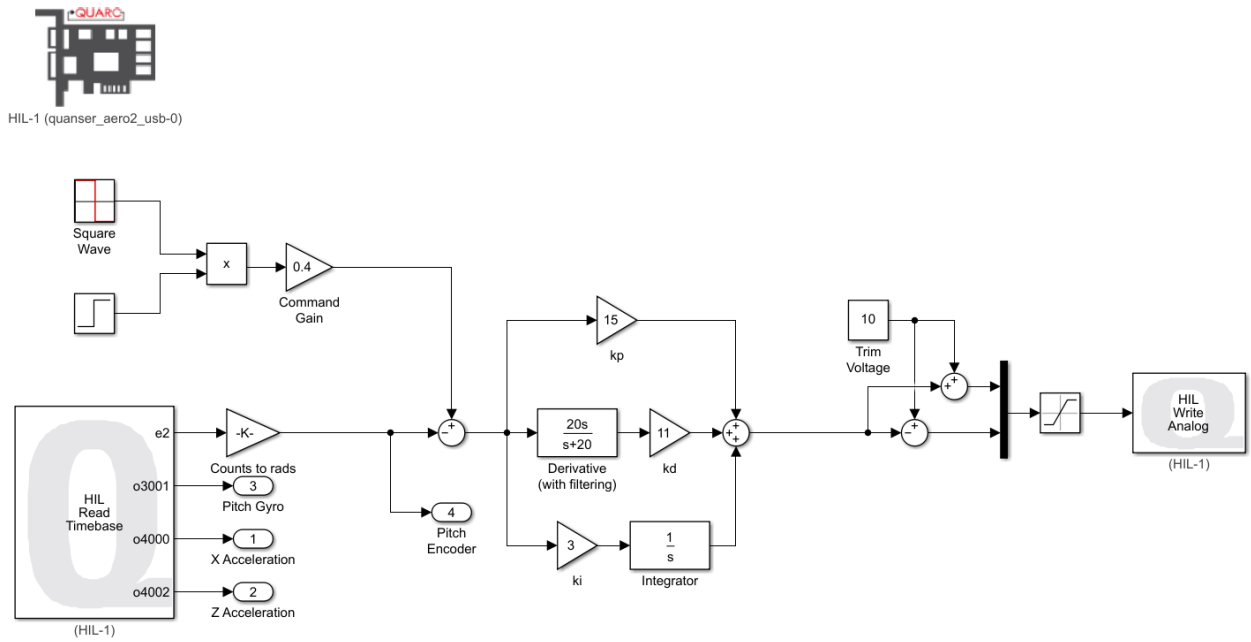

Figure 1: PID controller for the Aero 2 thrusters

3. Run *Power_Spectrum.m* file in Matlab. This script performs a fast Fourier transform on the signal from the accelerometer and uses this data to calculate the power distribution of the signal. The resulting graph shows how much power is carried by signal components are different frequencies. The graph should show two peaks, one low frequency, and one higher. Take notes on what frequencies the peaks occur at and identify the frequency of the noise signal that needs to be filtered. Capture the graph.

4. Add a transfer block between X Acceleration output and the scope. A low pass filter (LFP) allows all frequencies below a threshold frequency to pass through and removes any frequencies higher than the threshold. Set the transfer function to a low-pass filter with a natural frequency of 50 rads/s. What is the transfer function for this first-order filter?

5. Build and run the QUARC model. Roughly how much has the noise been attenuated by the filter?

6. Add a Mux block as shown in Figure 2 so that the filtered signal can be compared to the unfiltered sensor output.

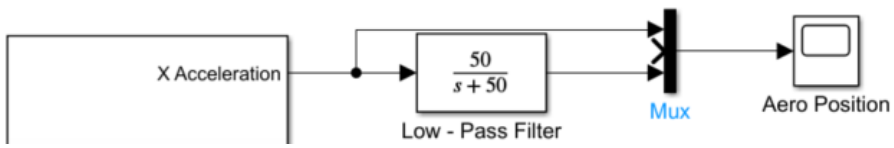

Figure 2: X-axis acceleration signal with a low-pass filter

7. Vary the cutoff frequency ω_f, between 10 and 200 rads/s (or 1.6 to 32 Hz). Note the effect that this has on the filtered response.

Gyroscope

1. Modify the QUARC model to add a Divide, Trigonometric Function as shown in Figure 3 to calculate the Aero body pitch from the accelerometer readings using equations from the concept reviews highlighted in the Measurement and Filtering Application Guide, and compare the calculated angle to the encoder measurement. Note that since the Y-axis orientation opposes that of the pitch encoder, the gyroscope readings must be given a gain of -1 as well.

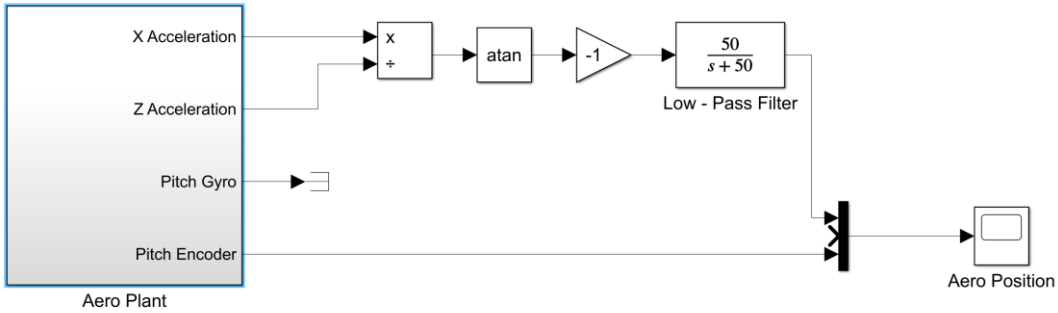

Figure 3: Calculating angle from acceleration

2. Build and run the QUARC model. Note how close or far the calculated angle matches the reading from the encoder.

3. Again, modify the QUARC model as shown in Figure 4 to calculate the Aero body pitch from the gyroscope readings using an integrator block.

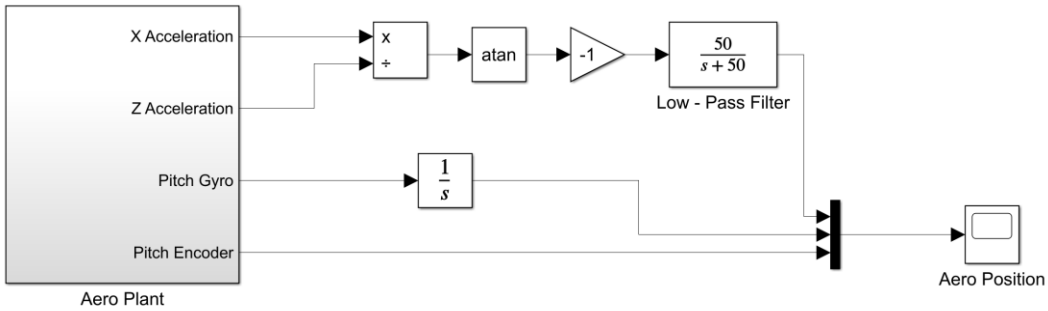

Figure 4: Calculating angle from acceleration and angular velocity

4. Build and run the QUARC model. Note how close the integrated angle matches the reading from the encoder now.

5. Now, modify the model to tune the input signal from the gyroscope to make the integrated position reading more accurate and to counteract errors in the gyroscope reading. Note down how you arrived at this model.

6. Stop and close the model. Power OFF the Aero 2.