QUANSER
INNOVATE · EDUCATE

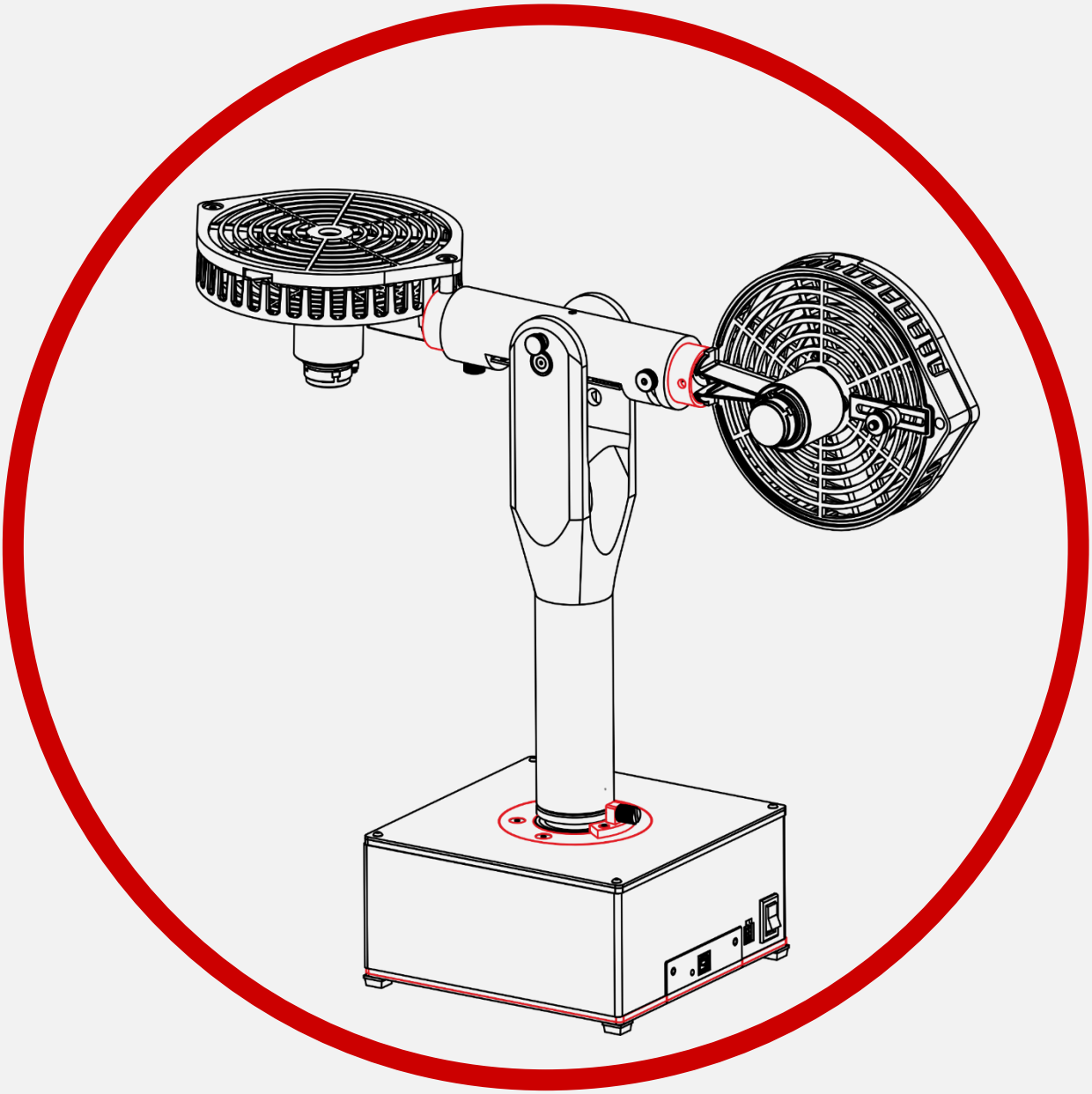

Aero 2

Rotor Speed Control

V1.0 – 14th February 2025

Aero 2 – Application Guide

Rotor Speed Control

Why do we need Rotor Speed Control?

Being able to control the speed of the rotor is a "must have" for many aerospace applications. The rotors on drones, for example, use servo motors that already have embedded speed controllers. The Aero 2 rotors do not have their own control – we therefore need to design our own. To do this we use a Proportional-Integral-Derivative (PID) based control. PID is the most common control method used worldwide and is worthwhile knowing. This lab will give you the opportunity to learn about PI control for a real-world application.

Topics

- Proportional-Integral (PI) control
- Second-order design specifications
- Rotor/motor speed control

In this lab, you will designing and developing a controller to regulate the speed of a rotating propellor on the Aero 2. Please read the following concept reviews before this lab for relevant information.

- Modeling (sections 2b)
- Introduction to Control
- PID Control
- Longitudinal Speed Control

Rotor Speed Control

In this lab, a proportional-integral (PI) controller is designed according to a set of time-domain performance requirements. The block diagram of the PI control that will be used to control the speed of the rotor is shown in Figure 1.

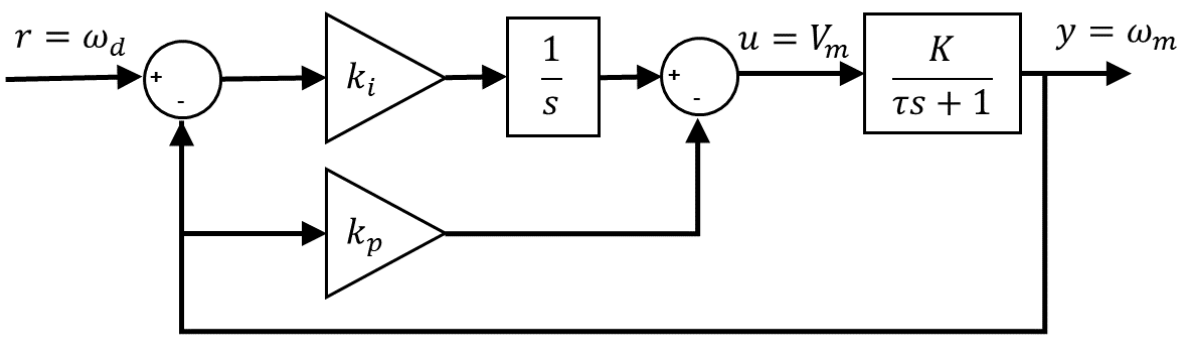

Figure 1 - PI control block diagram

Note that this is a variation of the standard PI control where only the negative position is fed back to the proportional control, i.e. not the error.

The equation of the PI control in Figure 1 is

$$u(t) = -k_d y(t) + \frac{k_i}{s}\big(r(t) - y(t)\big) \tag{1}$$

where k_p is the proportional control gain, k_i is the integral control gain, $r(t)$ is the reference rotor speed, and $y(t)$ is the measured rotor speed.

The transfer function of the PI control is

$$U(s) = -k_p Y(s) + k_i\big(R(s) - Y(s)\big) \tag{2}$$

Recall the rotor voltage-to-speed transfer function from the *Rotor Step Response Modelling* lab

$$P(s) = \frac{\Omega_m(s)}{V_m(s)} = \frac{K}{\tau s + 1} \tag{3}$$

where K is the motor steady-state gain, τ is the motor time constant, $\Omega_m(s) = \mathcal{L}[\theta(t)]$ is the Laplace Transform of the rotor angular speed, and $V_m(s) = \mathcal{L}[v_m(t)]$ is the Laplace Transform of the applied voltage.

Applying the PI control in Equation 2 to the open plant transfer function in Equation 3 and solving for $Y(s)/R(s)$, we can obtain the following closed-loop transfer function of the rotor

$$G_{y,r}(s) = \frac{\Omega_m(s)}{V_m(s)} = \frac{\frac{Kk_i s}{\tau}}{s^2 + \frac{1 + Kk_p}{\tau} s + \frac{Kk_i}{\tau}} \tag{4}$$

The closed-loop transfer function is a second-order system. We can therefore design the PI gains needed in order to match certain second-order system specifications.

PI Control Design

Based on the peak time, t_p, and percent overshoot, PO, specifications, we can find the natural frequency and damping ratio of the second-order system (see the Modeling Concept Review)

$$\zeta = \log\left(\frac{PO}{100}\right) \sqrt{\frac{1}{\log\left(\frac{PO}{100}\right)^2 + \pi^2}} \tag{5}$$

And

$$\omega_n = \frac{\pi}{t_p\sqrt{1 - \zeta^2}} \tag{6}$$

The rotor closed-loop transfer function in Equation 4 can be matched to the second-order system in Equation 5 with the PI gains:

$$k_p = \frac{2\zeta\omega_n\tau - 1}{K}$$

$$k_i = \frac{\omega_n^2\tau}{K} \tag{7}$$

This finalizes the PI rotor speed control design. We can now find the PI gains needed for our rotor to be within the peak time and percent overshoot specifications.