QUANSER
INNOVATE · EDUCATE

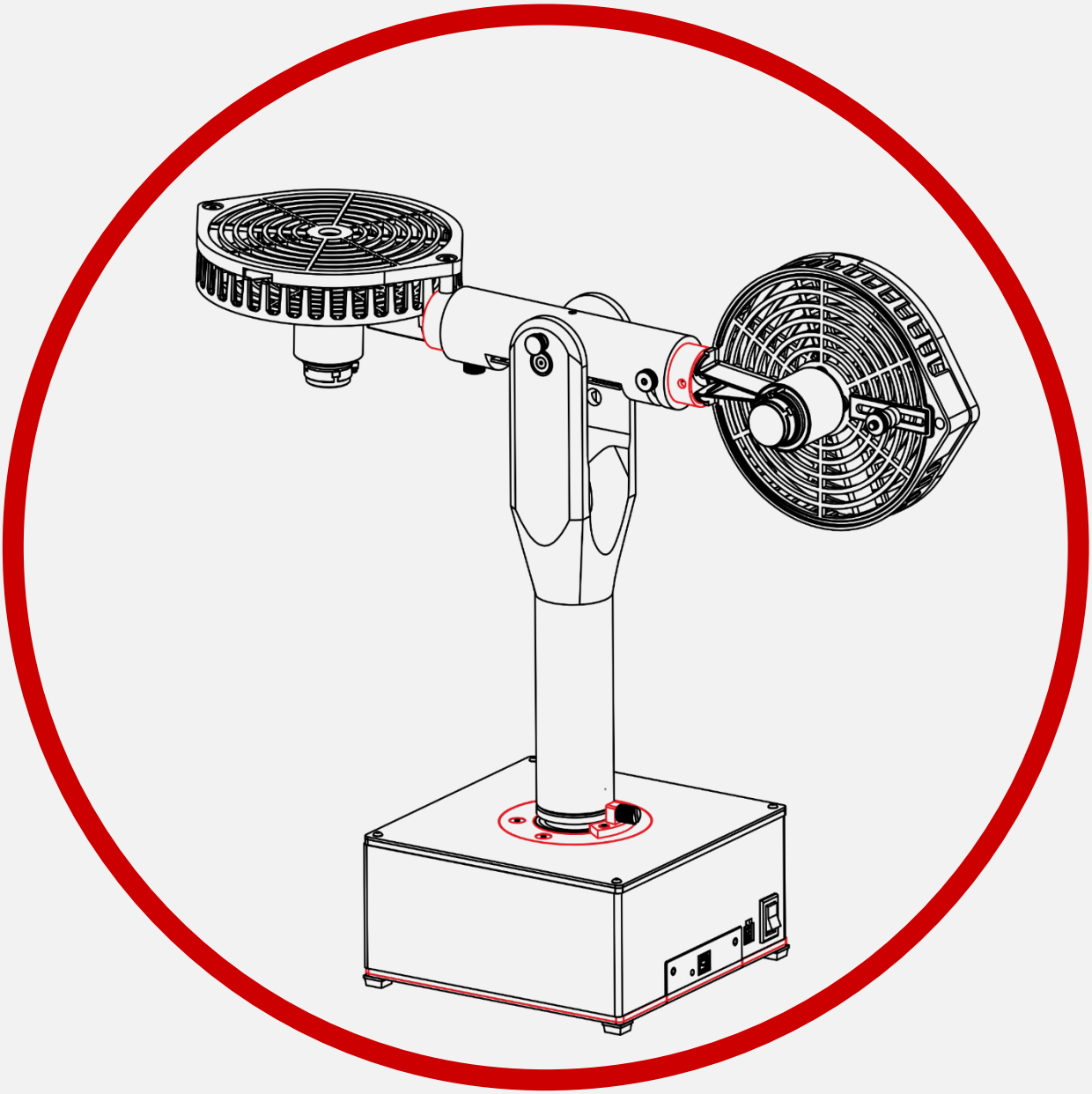

Aero 2

Pitch PID Control Design

V1.0 – 14th February 2025

Aero 2 – Application Guide

Pitch PID Control Design

Why Explore PID Control Design?

Tuning the PID controller manually as done in the Qualitative PID Control – Lab Procedure is an experimental heuristic way of finding suitable PID gains for a system. While this method does have its advantages (e.g., no model needed) and can yield a satisfactory response, it is also not practical or safe to be performed on certain systems. Model-based control design is the standard approach used in automotive and aerospace industries where the control gains are found analytically based on a set of specifications and a dynamic model of the system.

In the Rotor PI Speed Control – Lab Procedure, a PI control was designed to control the speed of the rotor actuator based on second-order specifications. In this lab, a PID control will be designed to control the position of the pitch angle for the 1 DOF Aero 2 system based on third-order specifications.

Please read the following concept reviews before this lab for relevant information.

- Modeling (sections 2b)
- Introduction to Control
- PID Control
- Longitudinal Speed Control

Control Design Overview

The block diagram shown in Figure 1 illustrates the full controller that will be implemented to control the pitch position. This is called a *cascade control* as it has two loops: an outer loop to control the pitch of the Aero 2 and an inner loop to control the speed of the rotor.

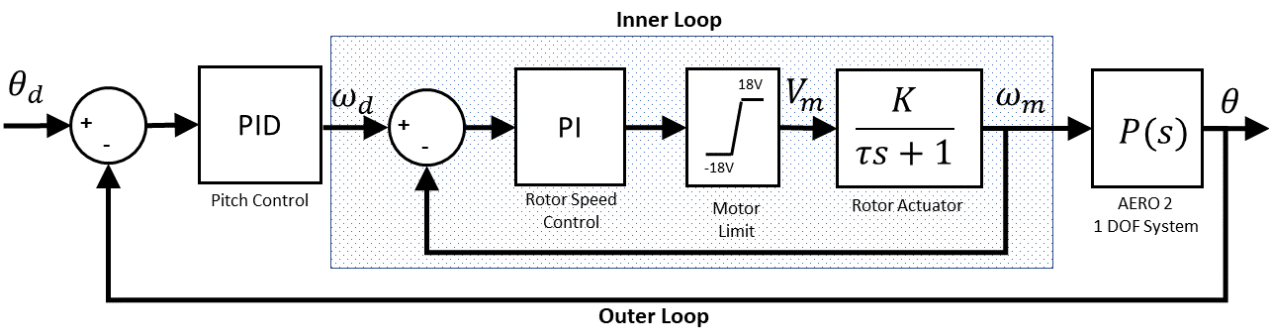

Figure 1 - Aero 2 Pitch Cascade Control

The inner rotor speed control design and implementation was performed in the Rotor PI Speed Control lab. We can treat the rotor as being *already controlled* and design the PID controller accordingly, i.e., assuming our control variable is the motor speed.

PID Control Design

The pitch transfer function was identified in the Pitch Parameter Estimation – Lab Procedure

$$P(s) = \frac{\Theta(s)}{\Omega_m(s)} = \frac{\frac{D_t K_{pp}}{J_p}}{s^2 + \frac{D_p}{J_p} s + \frac{K_{sp}}{J_p}} \tag{1}$$

where θ is the pitch angle, J_p is the equivalent moment of inertia acting about the pitch axis, D_p is the viscous damping, K_{sp} is the stiffness, K_{pp} is the force thrust gain relative to the rotor speed, D_t is the distance from the pivot point to the center of the rotor, and ω_m and is the rotor propeller speed.

The pitch of the Aero 2 system can be controlled using the following PID controller:

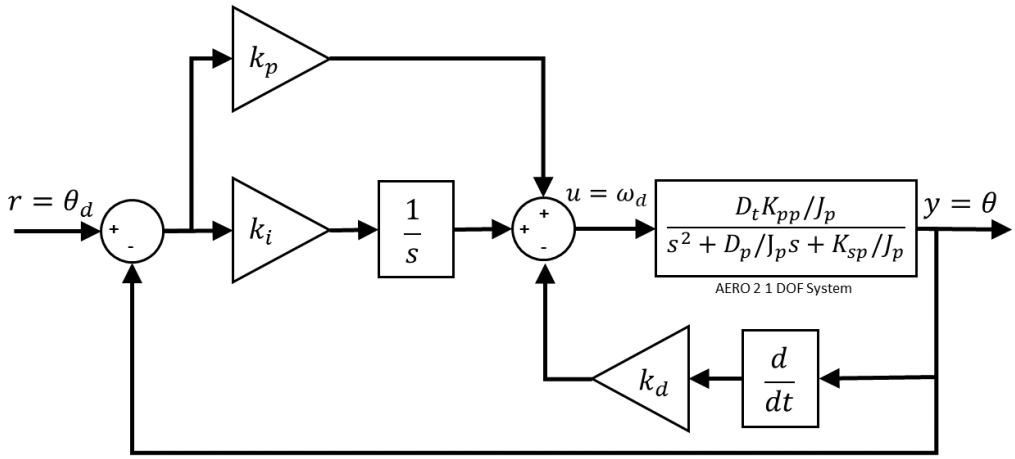

Figure 2 - Aero 2 Pitch PID Control

The time-domain equation of the PID controller in Figure 2 is

$$u = k_p(\theta_d - \theta) + k_i \int (\theta_d - \theta)\, dt - k_d \dot{\theta}$$

where $k_p$is the proportional gain, k_i is the integral gain, k_d is the derivative gain, and θ_d is the desired pitch angle. Remark that only the measured velocity is used, i.e., instead of using the derivative of the error. Using the rate feedback directly is a slight variation of the more standard PID approach. Here the control variable is the desired rotor speed, $u = \omega_d$, that goes to the PI control

Applying this to the open-loop transfer function and solving for $\Theta(s)/\Theta_d(s)$, the closed loop transfer function is

$$G_{\theta,d}(s) = \frac{\Theta(s)}{\Theta_d(s)} = \frac{K_t D_t (k_p s + k_i)}{J_p s^3 + (D_p + D_t K_t k_d) s^2 + (K_{sp} + D_t K_t k_p) s + D_t K_t k_i} \tag{2}$$

The prototype third-order characteristic polynomial is

$$(s^2 + 2\zeta\omega_n s + \omega_n^2)(s + p_0) = s^3 + (2\zeta\omega_n + p_0)s^2 + (\omega_n^2 + 2\zeta\omega_n p_0)s + \omega_n^2 p_0 \tag{3}$$

where ω_n is the natural frequency, ζ is the damping ratio, and p_0 is the pole location.

The following PID gains that will make the characteristic equation in the closed-loop transfer function in Equation 2 match the desired characteristic equation in Equation 3:

$$k_p = \frac{-K_{sp} + 2J_p p_0 \zeta \omega_n + J_p \omega_n^2}{D_t K_t}$$

$$k_i = \frac{p_0 J_p \omega_n^2}{D_t K_t} \tag{4}$$

$$k_d = \frac{-D_p + p_0 J_p + 2J_p \zeta \omega_n}{D_t K_t}$$