QUANSER
INNOVATE·EDUCATE

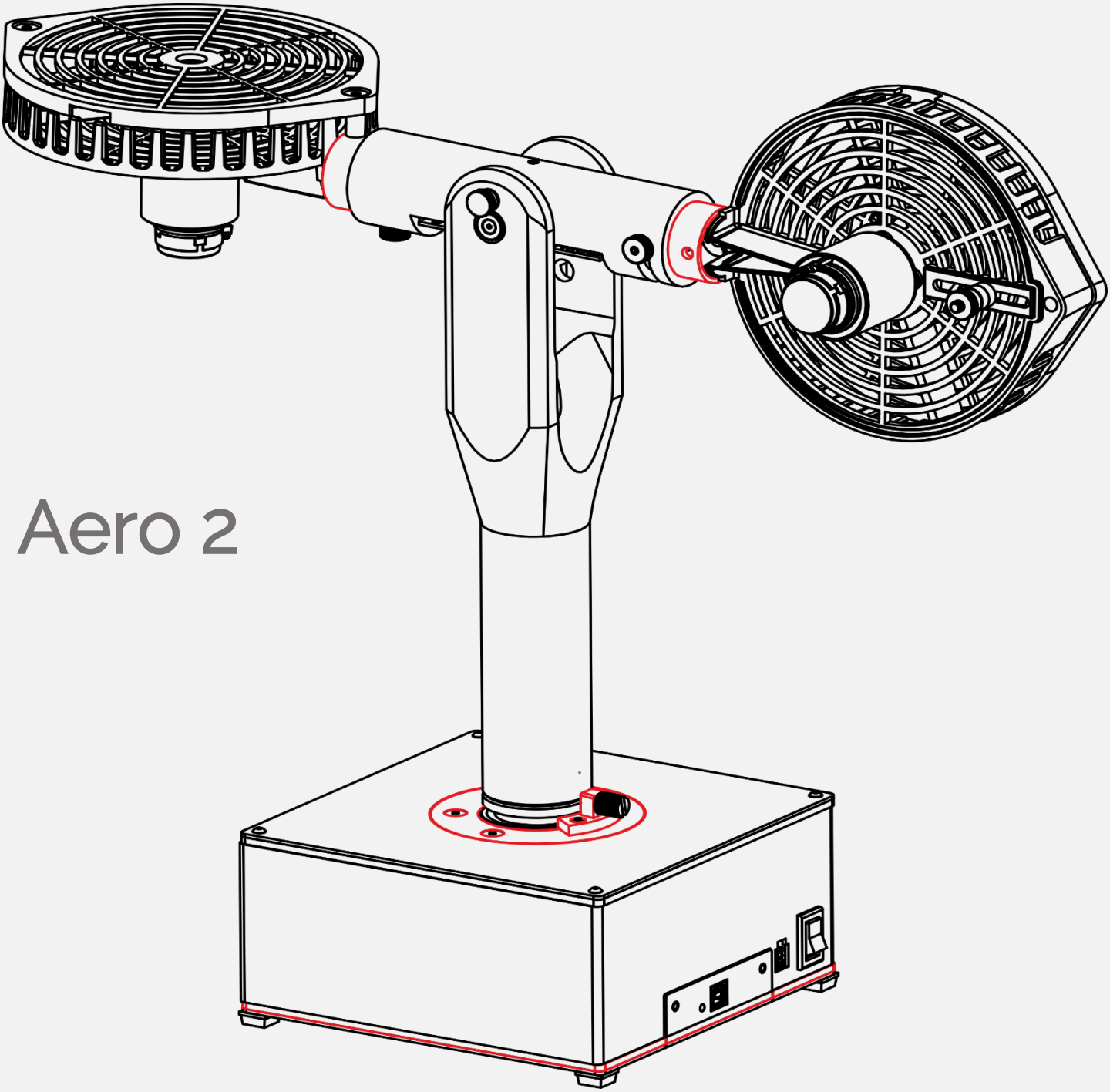

Aero 2

Pitch PID Control Design Laboratory

for MATLAB/Simulink

© 2022 Quanser Inc., All rights reserved.

Quanser Inc.
119 Spy Court
Markham, Ontario
L3R 5H6
Canada

info@quanser.com
Phone: 19059403575
Fax: 19059403576
Printed in Markham, Ontario.

For more information on the solutions Quanser Inc. offers, please visit the web site at: http://www.quanser.com

This document and the software described in it are provided subject to a license agreement. Neither the software nor this document may be used or copied except as specified under the terms of that license agreement. Quanser Inc. grants the following rights: a) The right to reproduce the work, to incorporate the work into one or more collections, and to reproduce the work as incorporated in the collections, b) to create and reproduce adaptations provided reasonable steps are taken to clearly identify the changes that were made to the original work, c) to distribute and publicly perform the work including as incorporated in collections, and d) to distribute and publicly perform adaptations. The above rights may be exercised in all media and formats whether now known or hereafter devised. These rights are granted subject to and limited by the following restrictions: a) You may not exercise any of the rights granted to You in above in any manner that is primarily intended for or directed toward commercial advantage or private monetary compensation, and b) You must keep intact all copyright notices for the Work and provide the name Quanser Inc. for attribution. These restrictions may not be waved without express prior written permission of Quanser Inc.

Aero 2 Concept Review

PID Control Design

Why Explore PID Control Design?

Tuning the PID controller manually as done in the Qualitative PID Control – Lab Procedure is an experimental heuristic way of finding suitable PID gains for a system. While this method does have its advantages (e.g., no model needed) and can yield a satisfactory response, it is also not practical or safe to be performed on certain systems. Model-based control design is the standard approach used in automotive and aerospace industries where the control gains are found analytically based on a set of specifications and a dynamic model of the system.

In the Rotor PI Speed Control – Lab Procedure, a PI control was designed to control the speed of the rotor actuator based on second-order specifications. In this lab, a PID control will be designed to control the position of the pitch angle for the 1 DOF Aero 2 system based on third-order specifications.

Control Design Overview

The block diagram shown in Figure 1 illustrates the full controller that will be implemented to control the pitch position. This is called a *cascade control* as it has two loops: an outer loop to control the pitch of the Aero 2 and an inner loop to control the speed of the rotor.

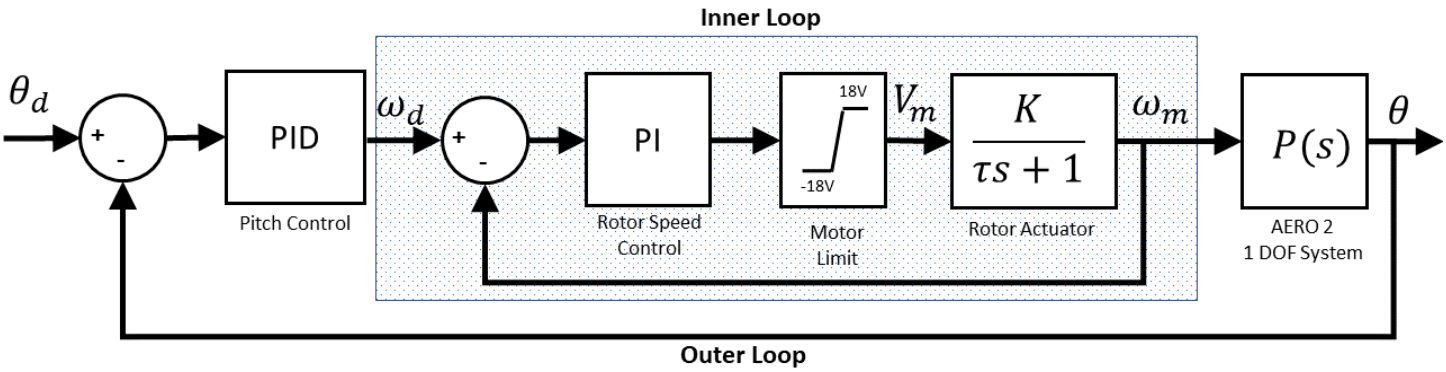

Figure 1 - Aero 2 Pitch Cascade Control

The inner rotor speed control design and implementation was performed in the Rotor PI Speed Control lab. We can treat the rotor as being *already controlled* and design the PID controller accordingly, i.e., assuming our control variable is the motor speed.

Peak Time and Percent Overshoot

The standard second-order system transfer function of the form

$$\frac{Y(s)}{R(s)} = \frac{\omega_n^2}{s^2 + 2\zeta\omega_n + \omega_n^2} \tag{1}$$

where ω_n is the natural undamped frequency and ζ is the damping-ratio. The shape of the response depends on the values of the ω_n and ζ parameters. A typical second-order response to a desired step signal of R_0 at time t_0 is shown in Figure 1.

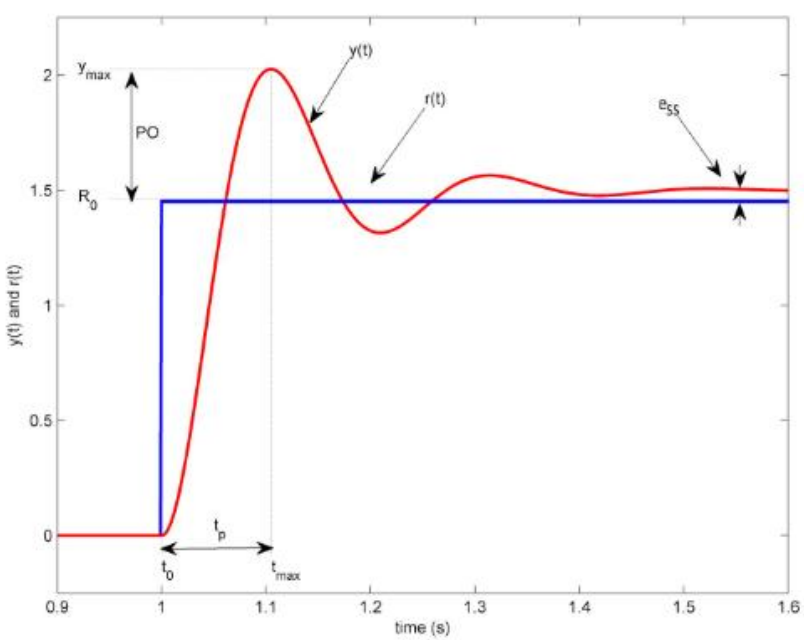

Figure 1: Standard second-order step response

The maximum value of the response is denoted by the variable y_{max} and it occurs at a time t_{max}. The *percent overshoot* is found using

$$PO = \frac{100(y_{mas} - R_0)}{R_0} \tag{2}$$

In a second order system, the amount of overshoot depends solely on the damping ratio parameter, and it can be calculated using the equation

$$PO = 100e^{-\frac{\pi\zeta}{\sqrt{1-\zeta^2}}} \tag{3}$$

From the initial step time t_0, the time it takes for the response to reach its maximum value is.

$$t_p = t_{max} - t_0 \tag{4}$$

This is called the *peak time* of the system and it depends on both the damping ratio and natural frequency of the system. It can be derived analytically as

$$t_p = \frac{\pi}{\omega_n\sqrt{1-\zeta^2}} \tag{5}$$

The damping ratio affects the shape of the response while the natural frequency affects the speed of the response.

PID Control Design

The pitch transfer function was identified in the Pitch Parameter Estimation – Lab Procedure

$$P(s) = \frac{\Theta(s)}{\Omega_m(s)} = \frac{\frac{D_t K_{pp}}{J_p}}{s^2 + \frac{D_p}{J_p}s + \frac{K_{sp}}{J_p}} \tag{6}$$

where θ is the pitch angle, J_p is the equivalent moment of inertia acting about the pitch axis, D_p is the viscous damping, K_{sp} is the stiffness, K_{pp} is the force thrust gain relative to the rotor speed, D_t is the distance from the pivot point to the center of the rotor, and ω_m and is the rotor propeller speed.

The pitch of the Aero 2 system can be controlled using the following PID controller:

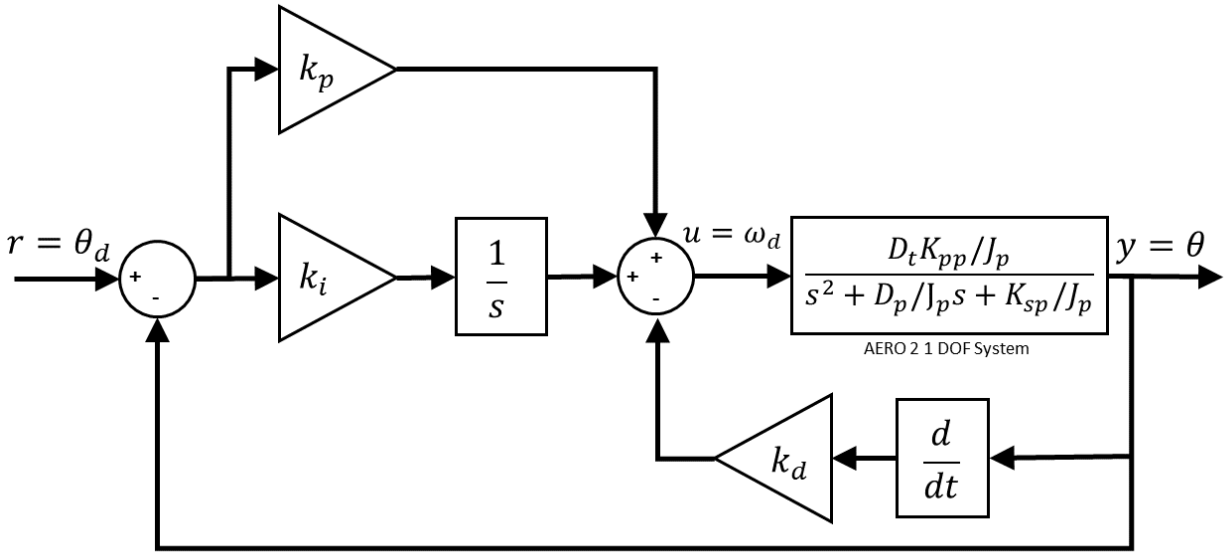

Figure 2 - Aero 2 Pitch PID Control

The time-domain equation of the PID controller in Figure 2 is

$$u = k_p(\theta_d - \theta) + k_i \int (\theta_d - \theta)\, dt - k_d \dot{\theta}$$

where $k_p$is the proportional gain, k_i is the integral gain, k_d is the derivative gain, and θ_d is the desired pitch angle. Remark that only the measured velocity is used, i.e., instead of using the derivative of the error. Using the rate feedback directly is a slight variation of the more standard PID approach. Here the control variable is the desired rotor speed, $u = \omega_d$, that goes to the PI control

Applying this to the open-loop transfer function and solving for $\Theta(s)/\Theta_d(s)$, the closed loop transfer function is

$$G_{\theta,d}(s) = \frac{\Theta(s)}{\Theta_d(s)} = \frac{K_t D_t\left(k_p s + k_i\right)}{J_p s^3 + \left(D_p + D_t K_t k_d\right)s^2 + \left(K_{sp} + D_t K_t k_p\right)s + D_t K_t k_i} \tag{7}$$

The prototype third-order characteristic polynomial is

$$(s^2 + 2\zeta\omega_n s + \omega_n^2)(s + p_0) = s^3 + (2\zeta\omega_n + p_0)s^2 + (\omega_n^2 + 2\zeta\omega_n p_0)s + \omega_n^2 p_0 \tag{8}$$

where ω_n is the natural frequency, ζ is the damping ratio, and p_0 is the pole location.

The following PID gains that will make the characteristic equation in the closed-loop transfer function in Equation 7 match the desired characteristic equation in Equation 8:

$$k_p = \frac{-K_{sp} + 2J_p p_0 \zeta\omega_n + J_p \omega_n^2}{D_t K_t}$$

$$k_i = \frac{p_0 J_p \omega_n^2}{D_t K_t} \tag{9}$$

$$k_d = \frac{-D_p + p_0 J_p + 2J_p \zeta\omega_n}{D_t K_t}$$