Aero 2 Lab Procedure
Pitch PID Control Design

Setup

1. Make sure the Aero 2 has been tested as instructed in the Quick Start Guide.
2. Launch MATLAB and browse to the working directory that includes the Simulink models for this lab.
3. Configure the Aero 2 in the 1 DOF pitch-only system:
    a. Unlock the pitch axis and lock the yaw axis.
    b. Both rotors are horizontal.
    c. Adjust weights on rotors so the Aero 2 body sits level.
4. Connect the USB cable to your PC/laptop.
5. Connect the power and turn the power switch ON. The Aero base LED should be red.

PID Control Design

Design a PID controller to match the following peak time, percent overshoot, and pole specifications:

$$t_p = 3.5$$

$$PO = 5\%$$

$$p_0 = 0.5$$

The following stiffness, viscous damping, and thrust force gains parameters that were identified can be used:

Symbol	Description	Value	Units
K_{sp}	Pitch axis stiffness	0.0204	N-m/rad
D_p	Viscous damping coefficient	0.00104	N-m/(rad/s)
K_{pp}	Pitch thrust force gain	2.52×10^{-4}	N/m

Table 1 - Sample identified values for stiffness, damping, and thrust gain.

For best results, it is highly recommended to find the parameters of the Aero 2 being used by going through the Pitch Parameter Estimation lab.

1. Find the equations to calculate the natural frequency and damping ratio needed to match percent overshoot and peak time specifications.

2. Evaluate the natural frequency and damping ratio needed to meet the desired peak time and percent overshoot above. Use the Aero 2 system parameters given in the User Manual and the identified parameters in
   Table 1, or, preferably, using your own identified parameters from the Pitch Parameter Estimation-Lab Procedure.

3. Design the PID controller to satisfy these specifications. Calculate the PID gains based on the natural frequency, ω_n, damping ratio, ζ, and pole location, p_0.

Simulating the PID Controller

Before running the PID control on the actual hardware (or virtual twin), it is important to first test that the PID control can match the peak time and overshoot requirements using the model of the system. This will be done using the s_aero2_pid Simulink model shown in Figure 1.

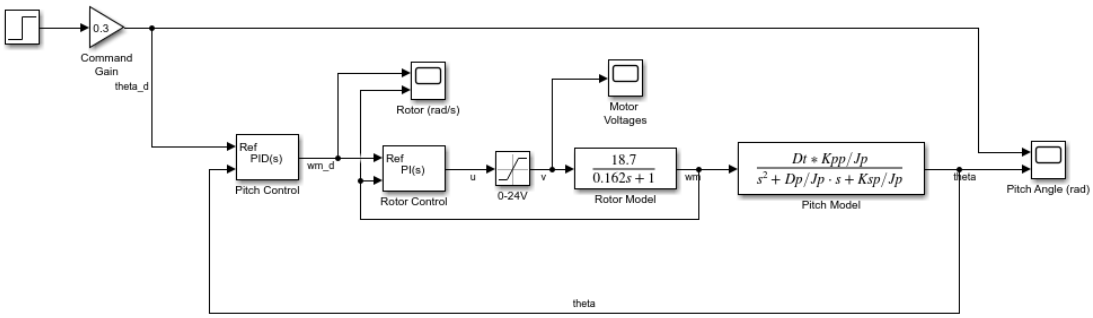

Figure 1 - Aero 2 pitch PID control simulation

Note that this simulation includes the actuator limits as well as the inner rotor speed control to emulate the actual system as closely as possible.

1. Open the *aero2_1dof_control_pitch_student.mlx* MATLAB Live Script.

2. Run the Aero 2 Pitch Model section to load the Aero 2 parameters.

3. Enter the equations for the PID gains - *kp, kd,* and *ki* - in MATLAB needed to match the desired peak time, *tp*, and percent overshoot, *PO*, specifications. Currently, the PID gains are set to default values.

4. Open the *s_aero2_pid.slx* Simulink model.

5. Run the *s_aero2_pid.slx* Simulink model to simulate the closed-loop response of the PID control. You should get a response similar to the scope shown in Figure 2.

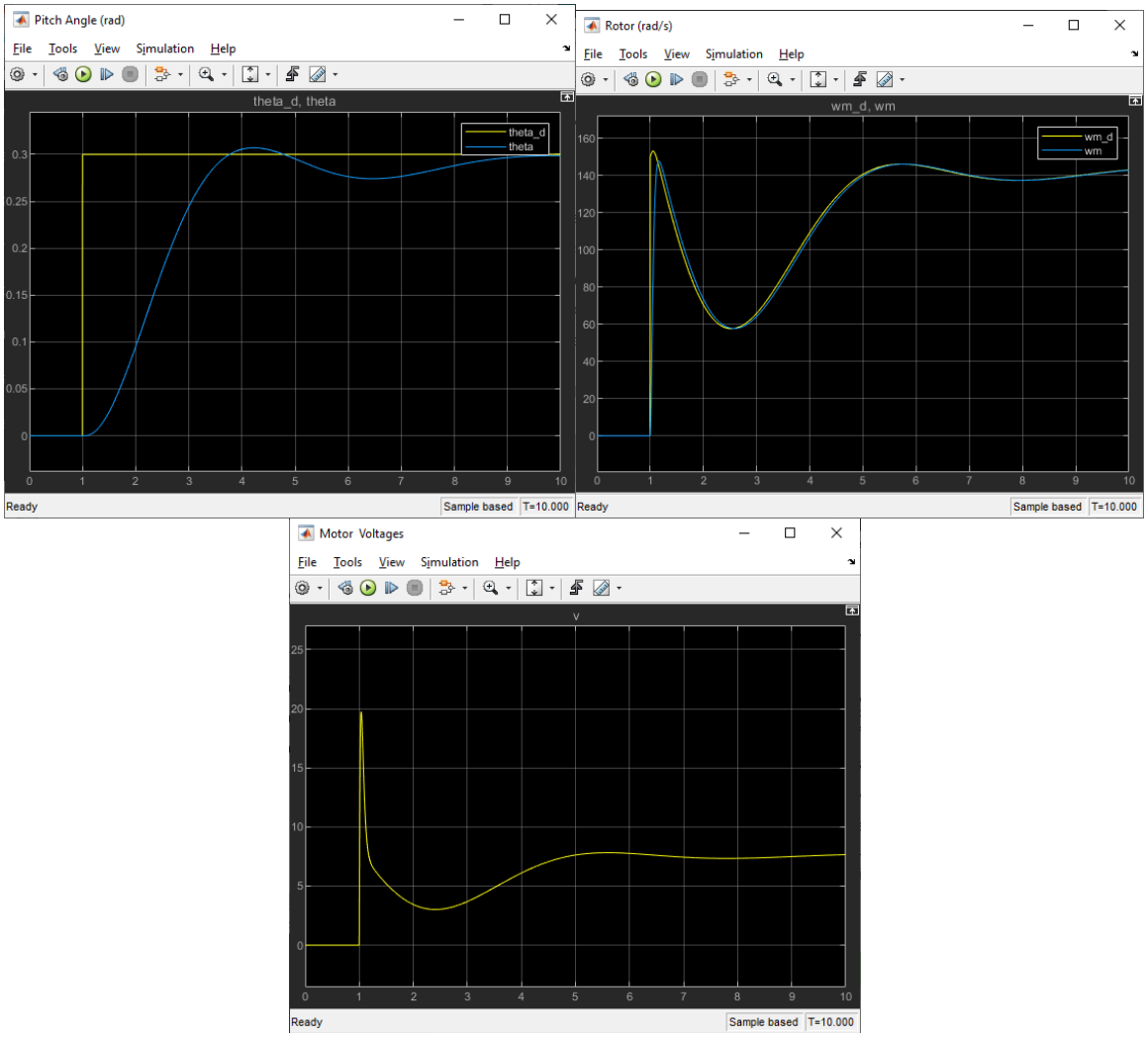

Figure 2 – Sample response from the Aero 2 simulation model

6. Attach the response you obtained in the pitch angle, rotor speed, and motor voltage as a MATLAB Figure using the saved data from the Scope. See the example code used in the Live Script.

7. Measure the peak time and percent overshoot. Do they match the specifications?

8. If the peak time and percent overshoot in the simulation are at least within 10% of the desired values, close the Simulink model than proceed to the hardware implementation phase. Otherwise, review the PID equations entered and simulate it again.

Hardware Implementation of the PID Controller

The PID controller will be run on the Aero 2 system using the *q_aero2_pid.slx* Simulink model shown in Figure 3 and the QUARC Real-Time Control software.

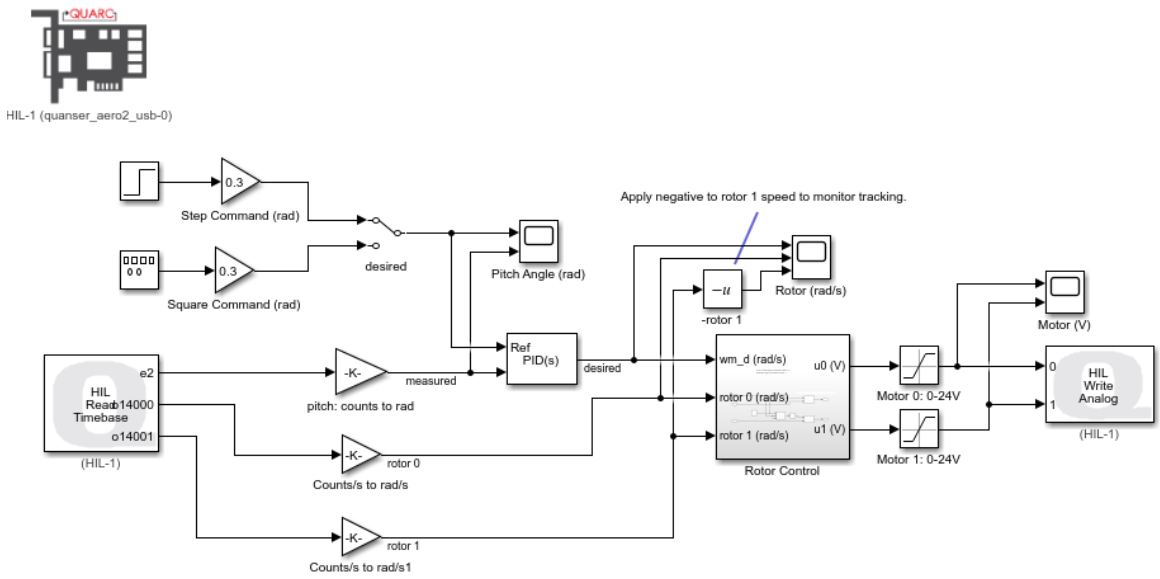

Figure *3* - Simulink/QUARC model used to run PID control on Aero 2.

Note that in the hardware implementation of the PID controller, the rotors are only permitted to have a positive thrust, i.e., positive motor voltage. Therefore both rotors are used to control the angle of the pitch. The front rotor, motor 0, drives the Aero 2 pitch in the positive direction, i.e. front rotor goes up, and the rear rotor, motor 1, drives the pitch angle in the negative direction, i.e. front rotor goes down.

The instructions below to implement the PID controller you designed on the Aero 2:

1. Make sure you went through the Simulating the PID Controller lab procedure first. The PID gains - *kp*, *kd*, and *ki* – should be loaded in the MATLAB workspace.
2. Open the *q_aero2_pid.slx* Simulink model.
3. Set the desired Manual Switch block to the upward position to generate a pitch step command.
4. Build and run the *q_aero2_pid.slx* Simulink model in QUARC to run the PID controller on the Aero 2 hardware. You should obtain a response similarly as shown in the scopes below.

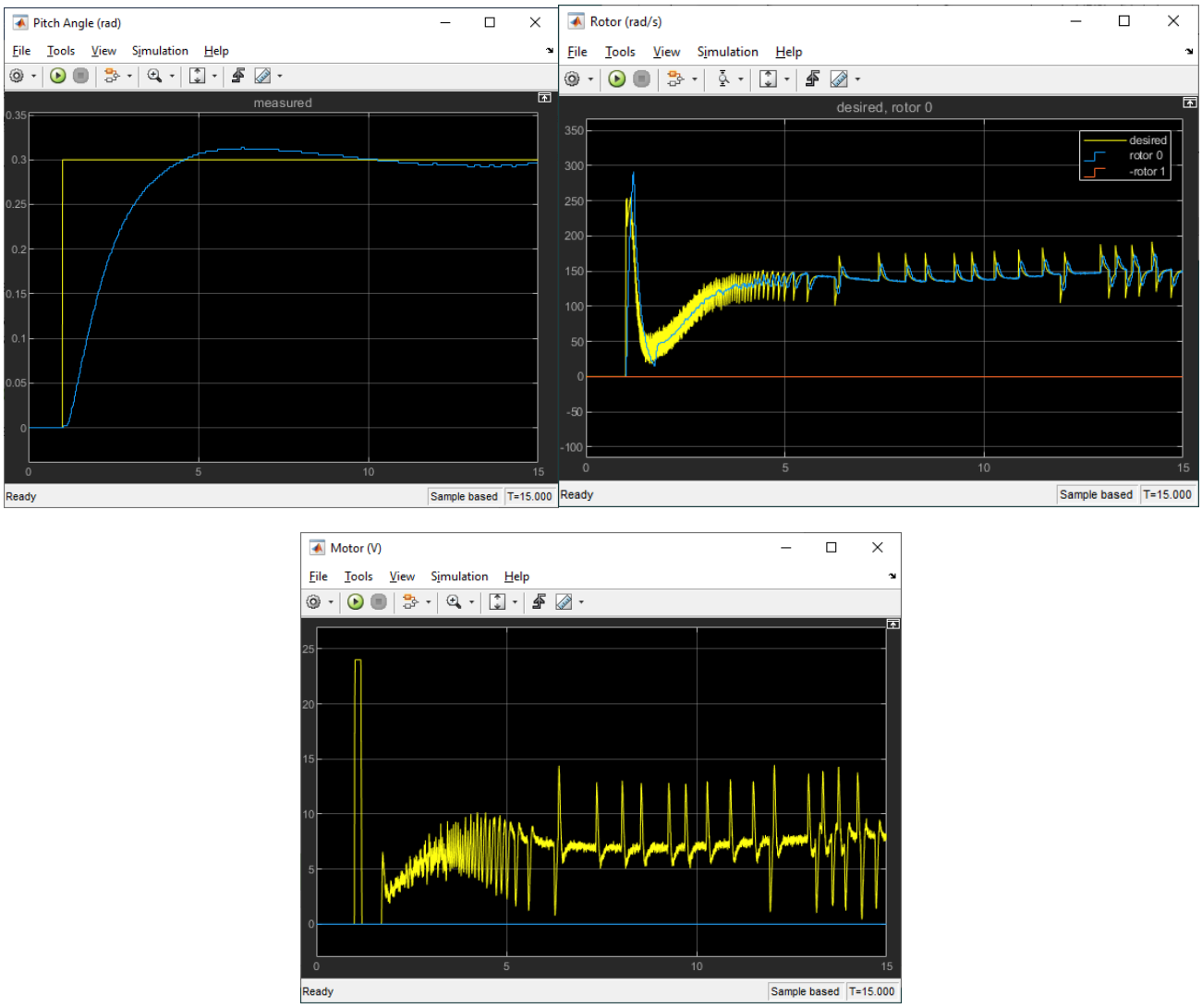

Figure 4 - Sample response from the Aero 2 simulation model

5. Capture the closed-loop response of the PID control. Attach the response you obtained in the pitch angle, rotor speed, and motor voltage in a MATLAB figure. See the example code in the Live Script.
6. Measure the peak time and percent overshoot. Do they match the specifications?
7. If the peak time and percent overshoot did not satisfy the requirements, then give one possible reason that could have caused this discrepancy.
8. Close the Simulink model.
9. Turn off the power on the Aero 2.