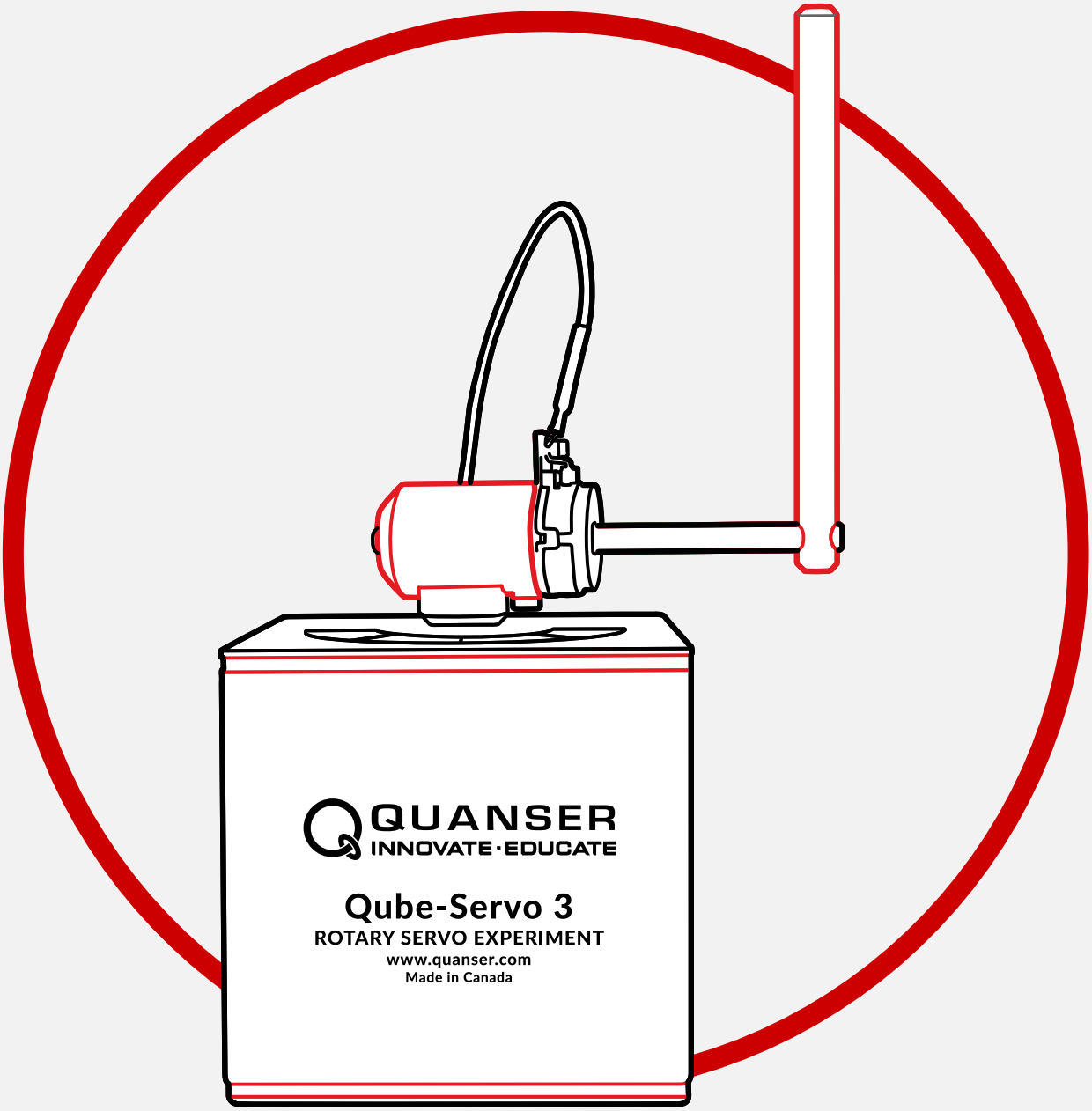

Qube-Servo 3

State Space Modeling

V1.2 – 27th February 2025

© 2025 Quanser Consulting Inc., All rights reserved.
For more information on the solutions Quanser offers,
please visit the web site at: http://www.quanser.com

Quanser Consulting Inc. info@quanser.com
119 Spy Court Phone : 19059403575
Markham, Ontario Fax : 19059403576
L3R 5H6, Canada printed in Markham, Ontario.

This document and the software described in it are provided subject to a license agreement. Neither the software nor this document may be used or copied except as specified under the terms of that license agreement. Quanser Consulting Inc. ("Quanser") grants the following rights: a) The right to reproduce the work, to incorporate the work into one or more collections, and to reproduce the work as incorporated in the collections, b) to create and reproduce adaptations provided reasonable steps are taken to clearly identify the changes that were made to the original work, c) to distribute and publicly perform the work including as incorporated in collections, and d) to distribute and publicly perform adaptations. The above rights may be exercised in all media and formats whether now known or hereafter devised. These rights are granted subject to and limited by the following restrictions: a) You may not exercise any of the rights granted to You in above in any manner that is primarily intended for or directed toward commercial advantage or private monetary compensation, and b) You must keep intact all copyright notices for the Work and provide the name Quanser for attribution. These restrictions may not be waved without express prior written permission of Quanser.

Caution

This equipment is designed to be used for educational and research purposes and is not intended for use by the public. The user is responsible for ensuring that the equipment will be used by technically qualified personnel only. Users are responsible for certifying any modifications or additions they make to the default configuration.

FCC Notice This device complies with Part 15 of the FCC rules. Operation is subject to the following two conditions: (1) this device may not cause harmful interference, and (2) this device must accept any interference received, including interference that may cause undesired operation.
Note: This equipment has been tested and found to comply with the limits for a Class A digital device, pursuant to part 15 of the FCC Rules. These limits are designed to provide reasonable protection against harmful interference when the equipment is operated in a commercial environment.

Industry Canada Notice This Class A digital apparatus complies with CAN ICES-3 (A). Cet appareil numérique de la classe A est conforme à la norme NMB-3 (A) du Canada.
Japan VCCI Notice This is a Class A product based on the standard of the Voluntary Control Council for Interference (VCCI). If this equipment is used in a domestic environment, radio interference may occur, in which case the user may be required to take corrective actions.

この装置は、クラス A 情報技術装置です。この装置を家庭環境で使用すると電波妨害を引き起こすことがあります。この場合には使用者が適切な対策を講ずるよう要求されることがあります。 VCCI-A

Waste Electrical and Electronic Equipment (WEEE)
This symbol indicates that waste products must be disposed of separately from municipal household waste, according to Directive 2012/19/EU of the European Parliament and the Council on waste electrical and electronic equipment (WEEE). All products at the end of their life cycle must be sent to a WEEE collection and recycling center. Proper WEEE disposal reduces the environmental impact and the risk to human health due to potentially hazardous substances used in such equipment. Your cooperation in proper WEEE disposal will contribute to the effective usage of natural resources.

电子信息产品污染控制管理办法 (中国 RoHS)

中国客户Quanser Consulting Inc. 关于关于限制在电子电气设备中使用某些有害成分的指令 (RoHS)。

CE Compliance CE

This product meets the essential requirements of applicable European Directives as follows:

- 2014/30/EU; Electromagnetic Compatibility Directive (EMC)

Warning: This is a Class A product. In a domestic environment this product may cause radio interference, in which case the user may be required to take adequate measures.

Qube-Servo 3 – Application Guide

State Space Modeling

What is state space modeling?

State space modeling describes DC motor dynamics using a set of first-order differential equations. This approach uses state variables (such as current, speed, and position) to capture the motor's behavior at any moment.

The model is typically expressed using two main equations: the state equation describing how variables change over time, and the output equation describing the values we can measure or observe. The advantages of this approach is that can easily handle multiple inputs and outputs while helping analyze into system stability and performance. The state space representation is useful for determining important characteristics of a system when doing control.

Background

This is one of multiple labs describing how to model a servomotor. Any of these labs can be done in any order. These modeling labs include modeling through frequency response, step response, parameter estimation, block diagrams and state space.

Prior to starting this lab, please review the following concept reviews (should be located in Documents/Quanser/4_concept_reviews/),

- Concept Review – Modeling → Modeling (Fundamental DC Motor Concepts section). You will need the motor's mechanical torque equations and the electrical equation of a motor.

State Space Representation

The standard statespace representation of a multi-input multioutput (MIMO) continuous lineartime invariant (LTI) system with n state variables, r input variables, and m output variables is:

$$\dot{x}(t) = Ax + Bu$$

$$y(t) = Cx(t) + Du(t)$$

Where:

- x is the vector of state variables $(n \times 1)$,
- u is the control input vector $(r \times 1)$
- y is the output vector $(m \times 1)$
- A is the system matrix $(n \times n)$
- B is the input matrix $(n \times r)$
- C is the output matrix $(m \times n)$, and
- D is the feedforward matrix $(m \times r)$.

The block diagram representation of statespace of the equations above is shown below:

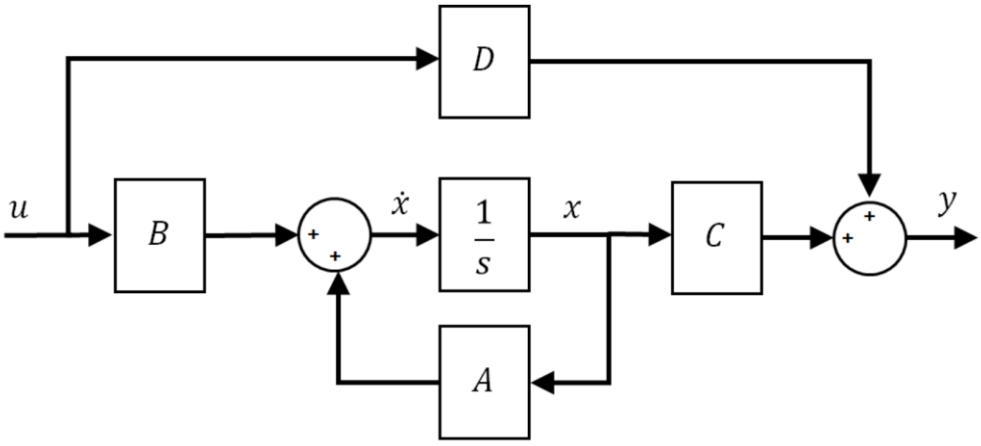

State-Space Block Diagram

Getting started

The goal of this lab is to create the state space representation for the DC motor equations of motion. A Simulink model will be used to compare the created state space model with the real life response of the Qube-Servo 3.

Ensure you have completed the following labs

- Hardware Interfacing Lab
- Filtering Lab

Before you begin this lab, ensure that the following criteria are met.

- If using a physical Qube-Servo 3, make sure it has been setup and tested. See the Qube-Servo 3 Quick Start Guide for details on this step. Make sure the inertia disc load is attached to the Qube-Servo 3.
- If using the virtual Qube-Servo 3, make sure you have Quanser Interactive Labs open in the Qube 3 - DC Motor → Servo Workspace.
- You are familiar with the basics of Simulink. See the Simulink Onramp for more help with getting started with Simulink.