Lab Procedure
State Space Modeling Virtual

Introduction

Ensure the following:

1. You have reviewed the Application Guide – State Space Modeling
2. Make sure you have Quanser Interactive Labs open in the Qube 3 - DC Motor → Servo Workspace.
3. Launch MATLAB and browse to the working directory that includes the Simulink models for this lab.

The **Hardware Interfacing** and **Filtering** labs explained the basic blocks to read and write from the Qube-Servo 3. For simplicity, all labs forward will use a Qube-Servo 3 block that sets up the system beforehand and outputs the available information from the Qube.

Using the gains found to convert tachometer counts/s into rads/s from the instrumentation labs. Use the qs3_ss_model.slx.

In this lab, the goal is to create a state space representation of the DC motor equations of motion. The calculated representation will then be compared to the physical response of the Qube-Servo 3. The Simulink model shown in Figure 1 applies a 5V step to the Qube-Servo 3 and the state space model of the servo. The measured and modeled speed responses are plotted in the same scope for comparison.

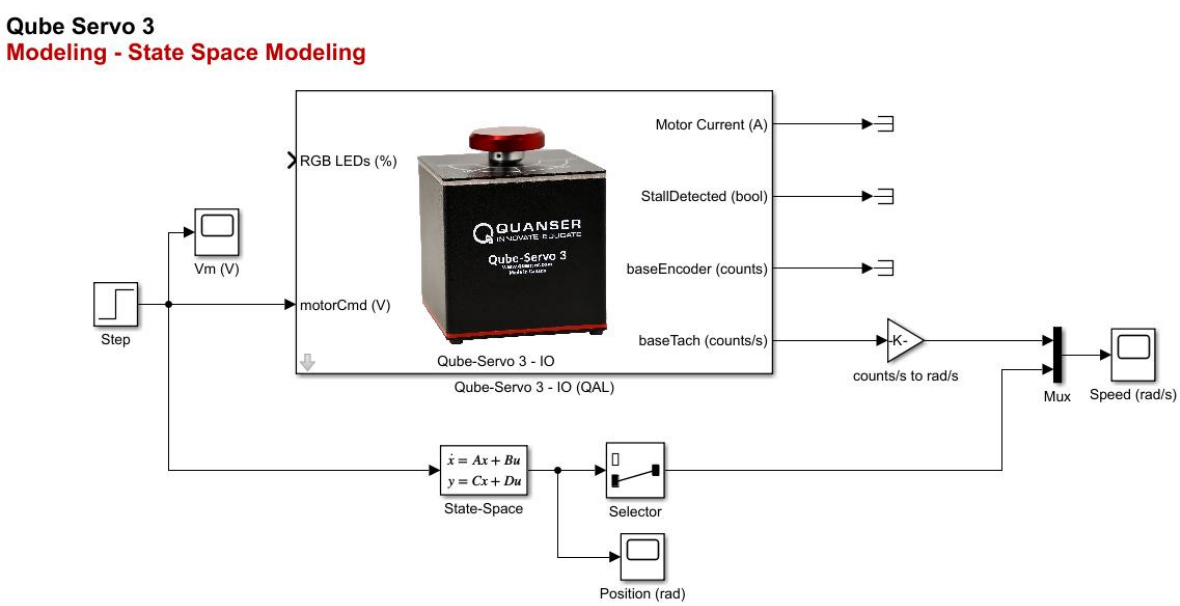

Figure 1: A 1V step input to a Qube-Servo 3 and its state space representation.

Creating the State Space Representation

1. Formulate the differential equation relating the motor position, θ_m, and its derivatives with the motor input voltage, $v_m(t)$.

   Start with the motor electrical equation:

   $$v_m(t) - R_m\, i_m(t) - k_m \dot{\theta}_m(t) = 0$$

   The motor shaft equation:

   $$J_{eq}\ddot{\theta}_m(t) = \tau_m(t)$$

   And the torque equation based on current:

   $$\tau_m(t) = k_t i_m(t)$$

2. Derive the state space representation of the DC motor from the differential equation you obtained above. Use the following state variables:

   $x_1 = \theta_m(t)$, $x_2 = \dot{\theta}_m(t)$,
   $y_1 = \theta_m(t)$, and $y_2 = \dot{\theta}_m(t)$ (measuring motor position and speed)
   and the input variable $u = v_m$.

3. Open qs3_ss_script.m which should be in the same folder as this file into your MATLAB workspace. The file does the following:

   a. Loads in the Qube-Servo 3 parameters. If you have done previous labs to calculate any of these values based on your specific Qube, replace those values in qube3_param.m.

   b. Creates the state space matrices, you should populate it with the real equations and values found in the previous step as the files only has placeholder values.

   c. Simulates a step response applied to the state space model.

4. Save your script and a screen capture of the simulated step response plot.

State Space Validation in Simulink

1. Open qs3_ss_model.slx as shown in Figure 1 and modify the tachometer gain. The model should apply a 5V step to the Qube-Servo 3 and its state space model. Start from the model in the Filtering Lab if the model was not provided.

2. Run the MATLAB script from the above section to load your state space model parameters into the MATLAB workspace. Click on your model and click Ctrl+D. This will make sure that if the State-Space block was red, it now loads the variables from the workspace and now not show errors.

3. Run the QUARC controller using the `Run` button on the `Simulation` tab. The response should be similar to the scope in Figure 2.

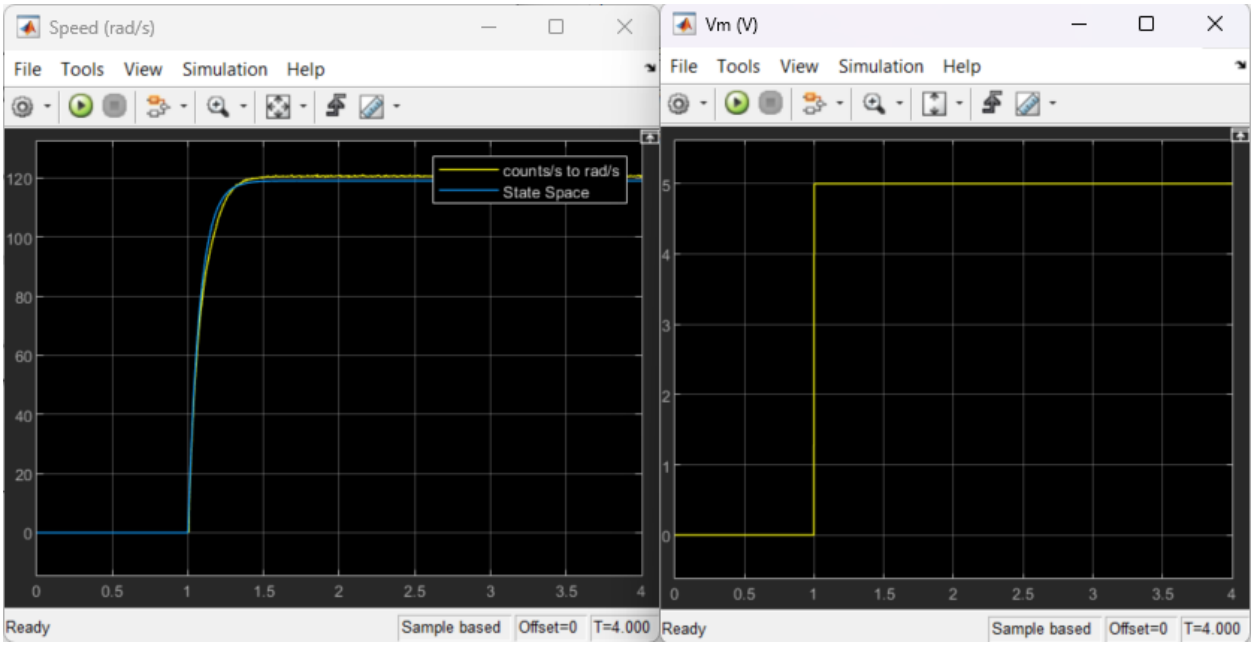

Figure 2: Comparison of the State Space Model with the physical response in the speed scope.

4. Take a screenshot of the speed (rad/s) scope.
5. Stop your model. Ensure you save a copy of the files for review later.
6. Close your model.
7. Close Quanser Interactive Labs.