Lab Procedure
Steady State Error

Introduction

Ensure the following:

1. You have reviewed the Application Guide – Steady State Error.
2. The Qube-Servo 3 has been previously tested, is ON and connected to the PC.
3. Inertia disc load is attached to the Qube-Servo 3.
4. Launch MATLAB and browse to the working directory that includes the Simulink models for this lab.

This experiment is about investigating the steady-state errors of step and ramp reference inputs when controlling the position of the inertia disc using Proportional-derivative (PD) and Proportional-Integral-Derivative (PID) controllers. You will calculate the steady-state errors both analytically and experimentally and compare the results.

Note that in the PID controller for this lab, the derivative gain is applied to the derivative of the output (that is, the velocity of the inertia disc) as shown in Figure 1 and this is sometimes called PIV control.

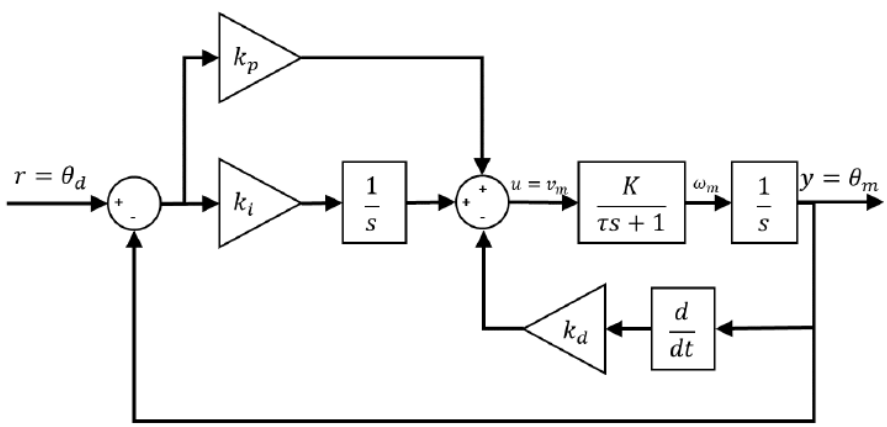

Figure 1: Block diagram of a PID controller

The following transfer function describes the system above.

$$\frac{Y(s)}{R(s)} = \frac{\frac{Kk_p}{\tau}s + \frac{Kk_i}{\tau}}{s^3 + \frac{(1 + Kk_d)}{\tau}s^2 + \frac{Kk_p}{\tau}s + \frac{Kk_i}{\tau}}$$

Use the qs3_sse.slx file. This model will implement a PID controller as described in the PID concept review and in Figure 1. Use the gain value found in previous labs to convert the encoder counts to radians and counts/s to rads/s. Connect all the blocks as shown in Figure 2. Use the manual switch to select either a step or ramp input.

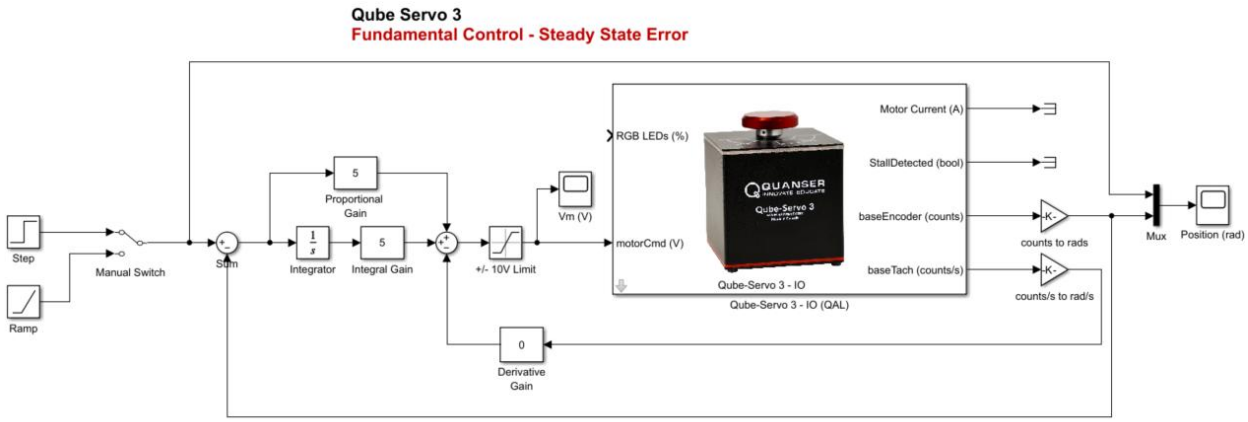

Figure 2: Simulink/QUARC model implementing PID position control.

Calculating Steady State Error Due to a Step Input

1. Find the closed-loop transfer function $\frac{E(s)}{R(s)}$ that represents the dynamics between the desired position, $R(s) = \Theta(s)$, and the error, $E(s) = Y(s) - R(s) = \Theta_m(s) - \Theta_d(s)$ when using PID control.

2. Find the error transfer function $E(s)$ for the step reference input where R_0 is the step magnitude:

$$\text{Step reference input: } R(s) = \frac{R_0}{s}.$$

3. Calculate the amount of steady state error in the system when using a PD controller (i.e. $k_i = 0$). What is the system type?

   Hint: Use the Final Value Theorem.

$$e_{ss} = \lim_{s \to 0} sE(s).$$

Finding Steady State Error Due to a Step Input from Experiments

4. Open the completed qs3_sse.slx Simulink model, as shown in Figure 2.

5. Set the proportional, integral, and derivative gains as follows: $k_p = 5$ V/rad, $k_d = 0.25$ V/(rad/s), $k_i = 0$. This will only implement PD control since $k_i = 0$.

6. Set the `Manual Switch` block to the `Step` signal.

7. Set the *Amplitude* of the `Step` block to 3. This will generate a step reference of 3 rad. The model duration is set to stop at 5.0 sec.

8. Build and run the QUARC controller using the `Monitor & Tune` button on the `Hardware` or `QUARC` tab.

9. Save a Screenshot of the step response, the response should be like Figure 3 below:

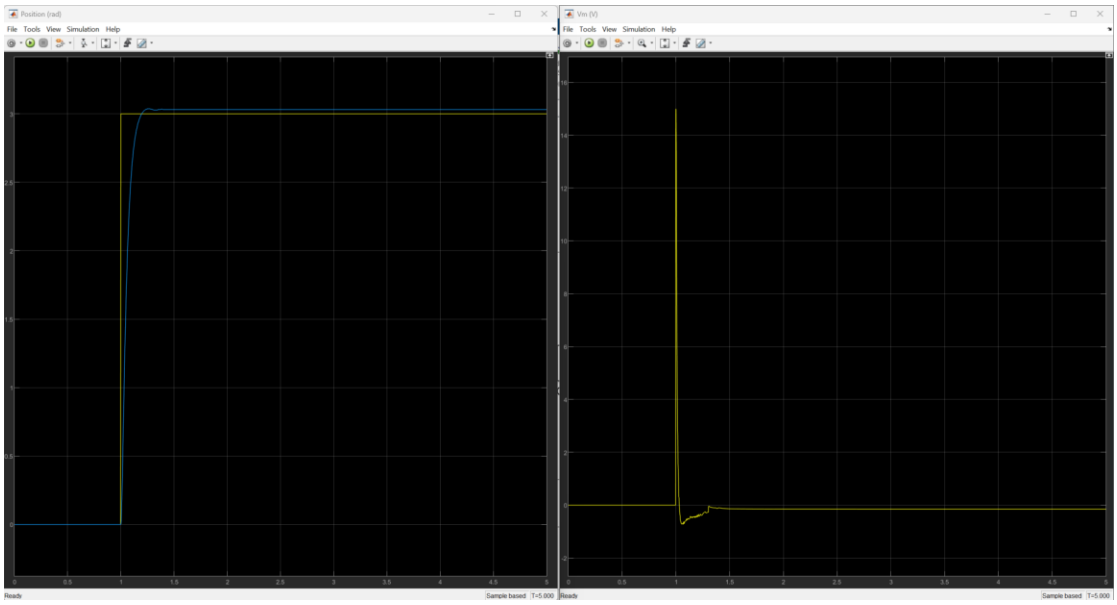

Figure 3: Screen capture of PD control with a step input signal.

10. Using the measurement tool in the scope, measure and write down the steady state error.

11. Comment on the difference between the calculated steady state error and the experimental steady state error. Are they the same? If not, please give one reason why there is a difference.

Calculating Steady State Error Due to a Ramp Input

12. Find the error transfer function for the ramp reference input when using a PID controller, where R_0 is the slope magnitude:

$$\text{Ramp reference input: } R(s) = \frac{R_0}{s^2}.$$

13. Calculate the steady state error equation of the system due to a ramp input when using a PD controller (i.e. $k_i = 0$).

14. Apply system parameters K, R_0, k_p, k_d (steady state gain, ramp amplitude, proportional gain, derivative gain) to the answer found above. Use $R_0 = 5$ and k_p, k_d use above. Use value of K from any of the modeling labs, or if no modeling lab has been done, $K = 24$ is a good default.

15. Calculate the steady state error of the system due to a ramp input when using a PID controller. Comment on the effects of adding integral control.

16. What is the system type for the PD and PID controlled systems?

Finding the Steady State Error Due to a Ramp Input from Experiments

17. Set the proportional, integral, and derivative gains to $k_p = 5$ V/rad, $k_d = 0.25$ V/(rad/s), and $k_i = 0$. This will implement PD control.

18. Set the `Manual Switch` block to the Ramp signal.

19. Set the Amplitude of the `Ramp` block to 15. This will make the slope of the ramp 5 rad/s.

20. Build and run the QUARC controller using the `Monitor & Tune` button on the `Hardware` or `QUARC` tab.

21. Save a Screenshot of the Ramp response, the response should be like Figure 4. Using the measurement tool in the scope, measure and write down the steady state error when using PD control. Is the calculated value of the same as the value found in the experiment? If not, give reasons.

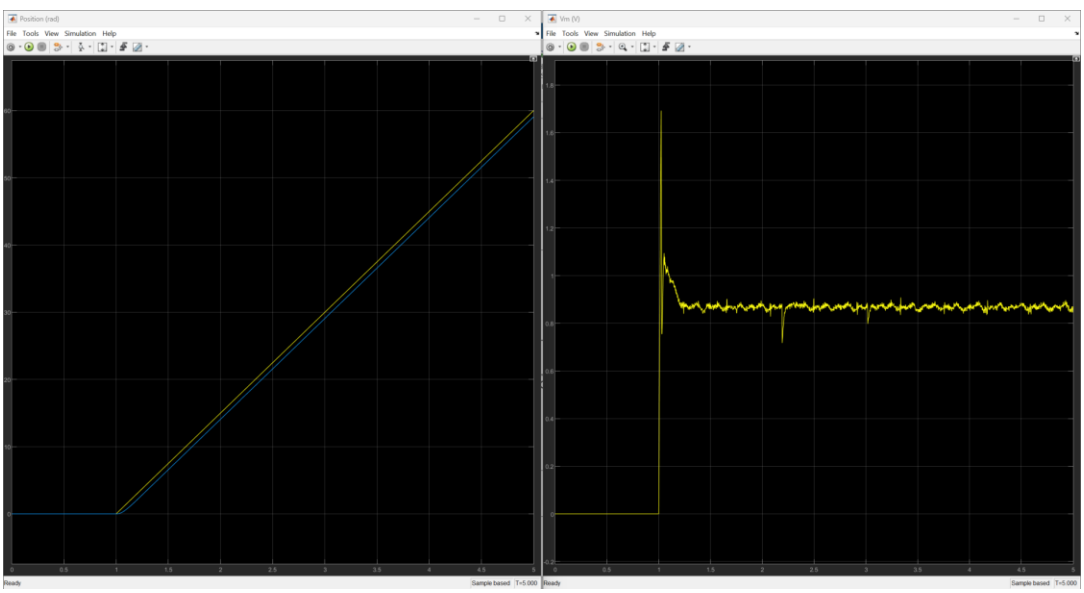

Figure 4: Screen capture of PD control with a Ramp response.

22. Set the integral gain to $k_i = 5$ V/(rad/s). This adds integral action leading a PID controller.

23. Build and run the QUARC controller using the `Monitor & Tune` button on the `Hardware` or `QUARC` tab.

24. Save a Screenshot of the Ramp response, the response should be like Figure 5. Using the measurement tool in the scope, measure and write down the steady state error when using PID control. Take note of how long it takes for the error to go to 0 rad.

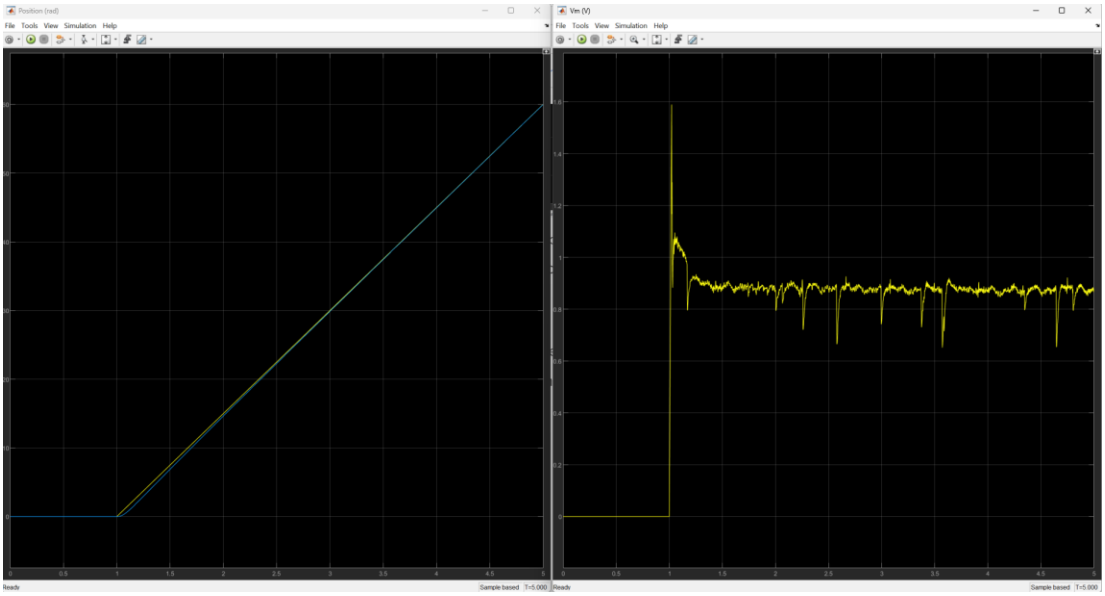

Figure 5: Screen capture of PID control with a Ramp response.

25. Tune the PID gains to obtain the best performance and note down your final PID gains. Explain your thinking behind the selection/tuning of your PID gains. Save a Screenshot of the response and using the measuring tool in the scope, record the time in takes the system to reach steady state and compare with that of the PD controller.