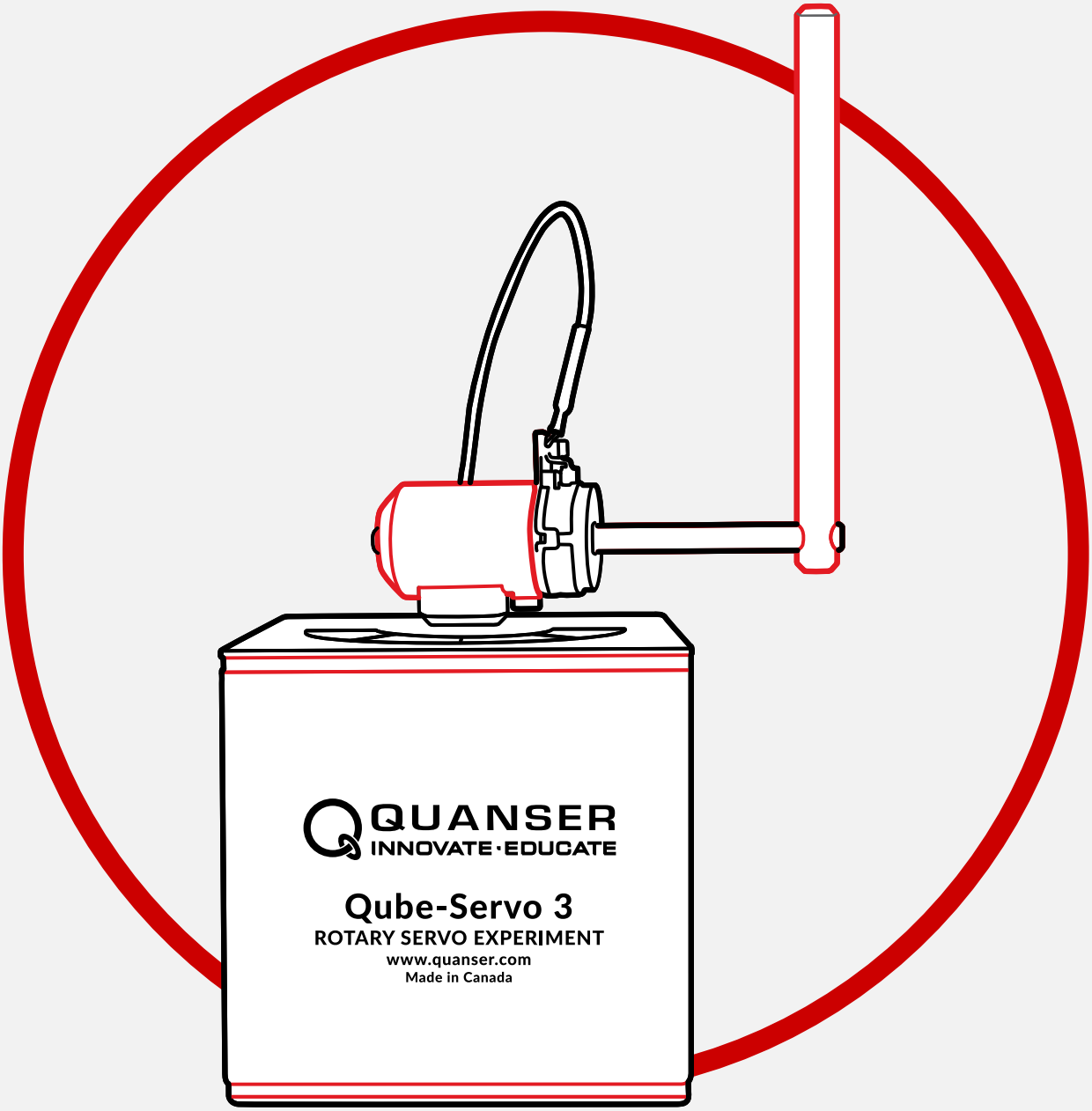

Qube-Servo 3

Balance Control

V1.2 – 27th February 2025

© 2025 Quanser Consulting Inc., All rights reserved.
For more information on the solutions Quanser offers,
please visit the web site at: http://www.quanser.com

Quanser Consulting Inc. info@quanser.com
119 Spy Court Phone : 19059403575
Markham, Ontario Fax : 19059403576
L3R 5H6, Canada printed in Markham, Ontario.

This document and the software described in it are provided subject to a license agreement. Neither the software nor this document may be used or copied except as specified under the terms of that license agreement. Quanser Consulting Inc. ("Quanser") grants the following rights: a) The right to reproduce the work, to incorporate the work into one or more collections, and to reproduce the work as incorporated in the collections, b) to create and reproduce adaptations provided reasonable steps are taken to clearly identify the changes that were made to the original work, c) to distribute and publicly perform the work including as incorporated in collections, and d) to distribute and publicly perform adaptations. The above rights may be exercised in all media and formats whether now known or hereafter devised. These rights are granted subject to and limited by the following restrictions: a) You may not exercise any of the rights granted to You in above in any manner that is primarily intended for or directed toward commercial advantage or private monetary compensation, and b) You must keep intact all copyright notices for the Work and provide the name Quanser for attribution. These restrictions may not be waved without express prior written permission of Quanser.

Caution

This equipment is designed to be used for educational and research purposes and is not intended for use by the public. The user is responsible for ensuring that the equipment will be used by technically qualified personnel only. Users are responsible for certifying any modifications or additions they make to the default configuration.

FCC Notice This device complies with Part 15 of the FCC rules. Operation is subject to the following two conditions: (1) this device may not cause harmful interference, and (2) this device must accept any interference received, including interference that may cause undesired operation.
Note: This equipment has been tested and found to comply with the limits for a Class A digital device, pursuant to part 15 of the FCC Rules. These limits are designed to provide reasonable protection against harmful interference when the equipment is operated in a commercial environment.

Industry Canada Notice This Class A digital apparatus complies with CAN ICES-3 (A). Cet appareil numérique de la classe A est conforme à la norme NMB-3 (A) du Canada.
Japan VCCI Notice This is a Class A product based on the standard of the Voluntary Control Council for Interference (VCCI). If this equipment is used in a domestic environment, radio interference may occur, in which case the user may be required to take corrective actions.

この装置は、クラス A 情報技術装置です。この装置を家庭環境で使用すると電波妨害を引き起こすことがあります。この場合には使用者が適切な対策を講ずるよう要求されることがあります。 VCCI-A

Waste Electrical and Electronic Equipment (WEEE)
This symbol indicates that waste products must be disposed of separately from municipal household waste, according to Directive 2012/19/EU of the European Parliament and the Council on waste electrical and electronic equipment (WEEE). All products at the end of their life cycle must be sent to a WEEE collection and recycling center. Proper WEEE disposal reduces the environmental impact and the risk to human health due to potentially hazardous substances used in such equipment. Your cooperation in proper WEEE disposal will contribute to the effective usage of natural resources.

电子信息产品污染控制管理办法 (中国 RoHS)

中国客户Quanser Consulting Inc. 关于关于限制在电子电气设备中使用某些有害成分的指令 (RoHS)。

CE Compliance CE

This product meets the essential requirements of applicable European Directives as follows:

- 2014/30/EU; Electromagnetic Compatibility Directive (EMC)

Warning: This is a Class A product. In a domestic environment this product may cause radio interference, in which case the user may be required to take adequate measures.

Qube-Servo 3 – Application Guide

Balance Control

Why explore Balance Control?

The inverted pendulum is a harder challenge than controlling a simple motor position or velocity. An inverted pendulum represents an unstable equilibrium - the slightest disturbance will cause it to fall away. Based on the Qube's system, the state cannot be directly controlled; instead, the pendulum angle must be influenced indirectly through the rotation of the motor in the base, introducing nonlinearities that complicate the analysis and control design. This provides a challenging yet insightful platform to investigate the principles of proportional-derivative (PD) control. By analyzing the dynamic behavior of this inherently unstable system, students can gain a deeper understanding of feedback control, system identification, and the practical implementation of control algorithms.

Background

This lab is part of the Pendulum Control skills progression of the Qube-Servo 3. These labs are focused on understanding different ways to maintain balance of an inverted pendulum and finish off with creating an energy based controller to swing it up and then maintain the balance.

The lab progression is as follows:

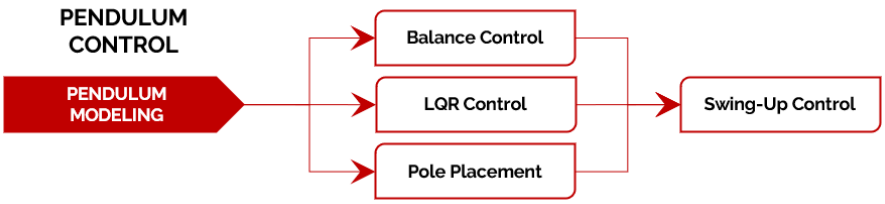

PD Balance Control

In this experiment we will find control strategies that balance the pendulum in the upright position while maintaining a desired position of the arm. When balancing the system, the pendulum angle α is small and balancing can be accomplished with a simple PD controller, as shown here

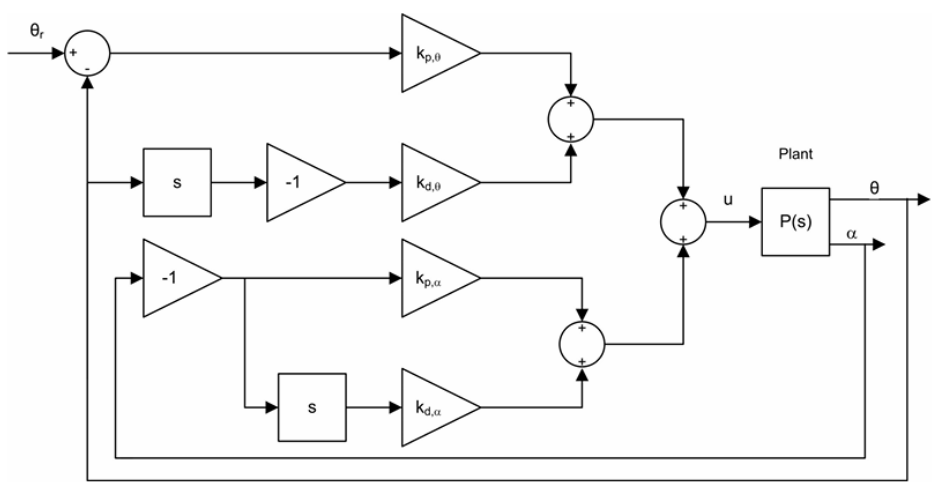

If we are further interested in keeping the arm in a desired position, a feedback loop from the arm position will also be introduced. Notice in the figure above that there is no error term for the reference angle for the pendulum, since it is always zero (i.e. upright position). The control law can then be expressed as

$$u = k_{p,\theta}(\theta_r - \theta) - k_{p,\alpha}\alpha - k_{d,\theta}\dot{\theta} - k_{d,\alpha}\dot{\alpha}$$

Where:

- θ_r is the desired, or reference, angle of the base.

- $k_{p,\theta}$ is the is the base angle proportional gain

- $k_{d,\theta}$ is the base angle derivative gain

- $k_{p,\alpha}$ the pendulum angle proportional gain

- $k_{d,\alpha}$ is the pendulum angle derivative gain

We will use default parameters to explore balance control.

Recall that the pendulum angle α is defined as zero when the pendulum is about its upright vertical position and expressed mathematically using $\alpha = \alpha_{full} \bmod 2\pi - \pi$, as defined in the Rotary Pendulum Modeling Lab. The balance control is to be enabled when the pendulum is within the following range: $|\alpha| \leq 10°$.

Given that the pendulum starts in the downward vertical position, it will need to be manually brought up to its upright vertical position. Once the pendulum is within $\pm 10°$, the balance controller is engaged. It remains in balance mode until the pendulum goes beyond $\pm 10°$

Getting started

In this lab, you will construct a Simulink model that uses two feedback PD loops to balance the pendulum once it is in the upright position. The goal of this lab is to explore the behavior of the balanced pendulum, so pre-determined control gains will be used.

Ensure you have completed the following labs

- **SP0 _ Instrumentation Labs**
- **SP5_ Pendulum Modeling Labs**

Before you begin this lab, ensure that the following criteria are met.

- If using a physical Qube-Servo 3, make sure it has been setup and tested. See the Qube-Servo 3 Quick Start Guide for details on this step.
- Make sure the pendulum attachment is set up and connected to the Qube-Servo 3 using the cable to the Encoder 1 port. Turn the plug to make sure the pendulum is centered around the front of the Qube at 0˚. The resistance from the cable will help keep it in the desired position.
- If using the virtual Qube-Servo 3, make sure you have Quanser Interactive Labs open in the Qube 3 - Pendulum → Pendulum Workspace.
- You are familiar with the basics of Simulink. See the Simulink Onramp for more help with getting started with Simulink.