Lab Procedure
Balance Control Virtual

Introduction

Ensure the following:

1. You have reviewed the Application Guide – Balance Control
2. Make sure you have Quanser Interactive Labs open in the Qube 3 – Pendulum → Pendulum Workspace.
3. Launch MATLAB and browse to the working directory that includes the Simulink models for this lab.

The **Hardware Interfacing** and **Filtering** labs explained the basic blocks to read and write from the Qube-Servo 3. For simplicity, all labs forward will use a Qube-Servo 3 block that sets up the system beforehand and outputs the available information from the Qube.

In this lab you will use the qs3_balance.slx file to complete the model as shown in Figure 1. This model will be a PD controller to balance the pendulum.

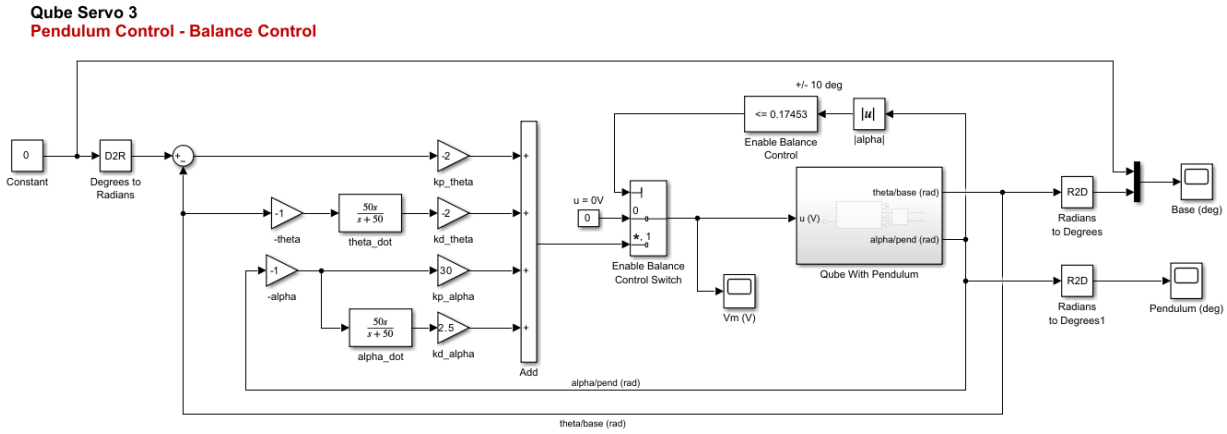

Figure 1: PD control to balance the pendulum

Constructing the Model

1. Add a `Constant` and `Degrees to Radians` block as the desired input to the system.

2. Using `Transfer Fcn` blocks, add a derivative and low-pass filter transfer function of $\frac{50s}{s+50}$ to obtain the velocity of the rotary arm and pendulum. Note how we don't use the tachometer for speed in this case. The tachometer is not the best when movements are very small. Using the derivative of the position is the better solution in this case.

3. Add a `Sum` block to complete the PD control.

4. Add the logic to make sure the controller is only enabled when the pendulum is $\pm 10°$ ($\pm .175\ rad$) from the upright position. Add an `Abs` and `Compare to Constant` blocks.

5. Make sure that inside the `Qube With Pendulum` subsystem, the `Counts to Angles` subsystem matches the one you created in the Pendulum Interfacing lab to convert encoder counts to radians and use the inverted pendulum angle (using `mod`).

6. Your system should now look like the model in Figure 1.

Testing the Model

7. Set the PD gains as follows:

$$k_{p,\theta} = -2 \qquad k_{d,\theta} = -2$$

$$k_{p,\alpha} = 30 \qquad k_{d,\alpha} = 2.5$$

8. Run the QUARC controller using the `Run` button on the `Simulation` tab.

9. Bring the pendulum up using the lift pendulum button until the controller engages. Take a screenshot of the Pendulum, Base and Voltage scopes. They should look similar to Figure 2.

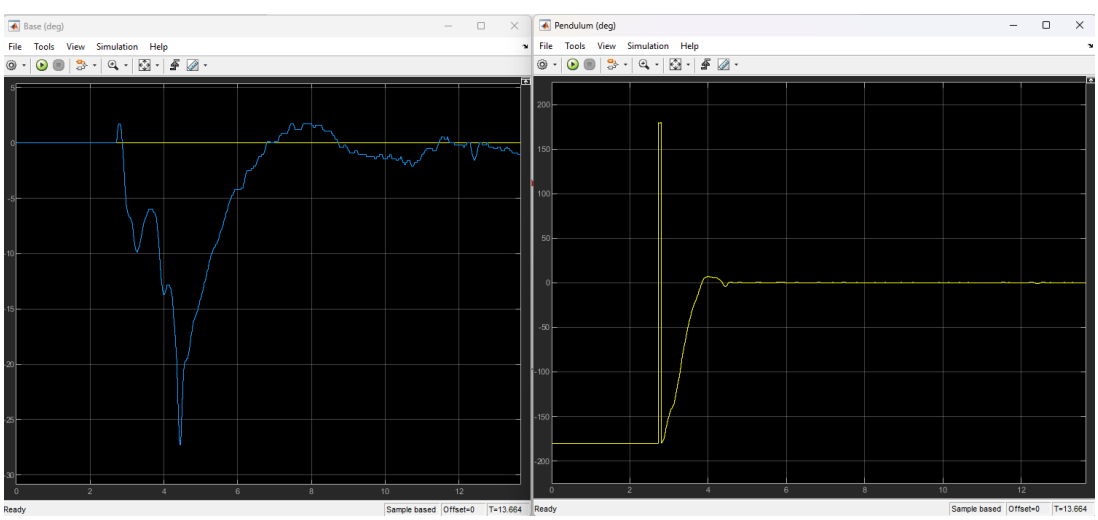

Figure 2. Sample response of balancing the Qube-Servo 3 pendulum.

10. As the pendulum is being balanced, take note of any behaviours of the base or pendulum in the response.

11. Change the `Constant` block at the left of the model. What happens in the scope for the Base? Do not make it higher than ± 45. What variable does this block represents?

12. Take a screenshot of the scopes demonstrating how changing the `Constant` block affects the response.

13. Stop and close your model. Ensure you save a copy of the files for review later.

14. Close Quanser Interactive Labs.