Lab Procedure
Swing-Up Control Virtual

Introduction

Ensure the following:

1. You have reviewed the Application Guide – Swing-Up Control
2. Make sure you have Quanser Interactive Labs open in the Qube 3 – Pendulum → Pendulum Workspace.
3. Launch MATLAB and browse to the working directory that includes the Simulink models for this lab.

In this lab you will use the qs3_swingup.slx file to complete the model as shown in Figure 1. This will use the balance controller from LQR and have an energy-based swing-up control to bring the pendulum up for the balance controller to kick in. The energy controller happens in the *Swing-Up Control* subsystem. The lab will be done in three sections, where the first one will be creating the energy controller. Afterwards, an analysis of the energy values will be done before the full implementation of the swing up will be done.

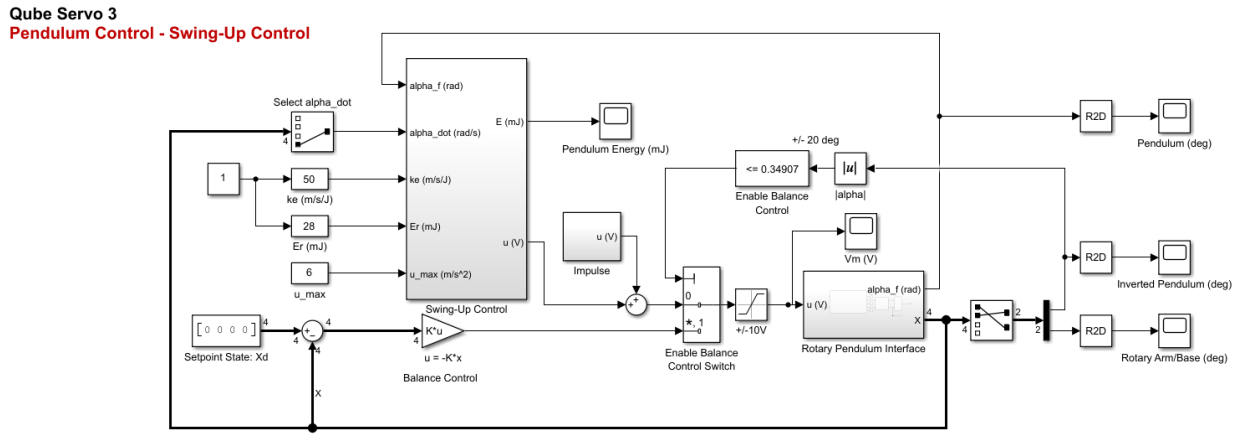

Figure 1: LQR pendulum balance control model

Creating the Energy Controller

1. Open the qs3_swingup.slx Simulink model.
2. Run the *setup_swingup.m* MATLAB script. This loads the pendulum parameters used by the Simulink model.
3. Open the `Swing-Up Control` subsystem and inside, open the `Energy-Based Swing-Up Control` subsystem.
4. Open the Pendulum Energy subsystem.
5. Build the model based on the equation shown in the subsystem $\mathrm{E} = \frac{1}{2}J_p\dot{\alpha}^2 + m_p gl(1-\cos\alpha)$ which describes the potential and kinetic energy of the pendulum. Use the variable names from the *setup_swingup.m* file.
6. Once your output Energy is set up to be calculated correctly, go back to the `Energy-Based Swing-Up Control` subsystem.
7. Create the Energy Based Swing-up controller based on the equation shown in the subsystem $u = sat_{umax}\big(k_e(E-E_r)\mathrm{sign}(\dot{\alpha}\cos\alpha)\big)$. The inputs and some of the steps that might be needed for the equation are provided to help build the system. The saturation of the signal is set up for you.
8. Once the energy-base swing-up is finished, the acceleration output to swing up the pendulum needs to be converted into a usable input for the Qube-Servo. Go back to the `Swing-Up Control` subsystem and add that conversion based on the equation provided on the subsystem.
9. Go back to the main screen of the model. Your whole `Swing-Up Controller` should be ready.

Exploring Energy Control

10. Set the `Slider Gain` block ke to 0. This will turn OFF the swing-up control.
11. Run the QUARC controller using the Run button on the Simulation tab.
12. Rotate the pendulum to different levels using the pendulum lift angle setting in the virtual workspace and examine the pendulum angle and energy in the *Pendulum (deg)* and *Pendulum Energy (mJ)* scopes.

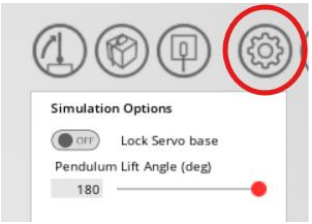

13. Rotate the pendulum until the balance control is enabled. Take a screenshot of the *Pendulum (deg)* and *Pendulum Energy (mJ)* scopes. Note the energy in this upright position.

14. Bring the pendulum back to the downright position.

15. Set the swing up control parameters (i.e. the `Constant` and `Gain` blocks connected to the inputs of the `Swing-Up Control` subsystem) to the following:
    - ke = 50 m/s/J
    - Er = 10.0 mJ
    - u_max = 6 m/s²

16. If the rotary arm does not start rotating back and forth, gently perturb the pendulum to get it started, you could click lift pendulum or you can change the Lift Angle to something small and click lift pendulum again.

17. Vary the reference energy, E_r, between 10.0 mJ and 20.0 mJ. Take a screenshot of the *Pendulum (deg)*, *Pendulum Energy (mJ),* and *Vm (V)* scopes that represents the behaviour of the system when the reference energy is increased.

18. Fix E_r to 20.0 mJ and vary the swing-up control gain ke between 20 and 60 m/s²/J. Take a screenshot of the scopes that represents the behaviour of the system when ke is increased.

19. Stop your model.

Hybrid Swing-Up Control Implementation

20. Set the swing-up control parameters to the following:
    - ke = 20 m/s/J
    - u_max = 6 m/s2

21. Based on observations in the previous section of the lab, set the reference energy E_r in the Simulink model.

22. Ensure the pendulum is hanging down motionless and the encoder cable is not interfering with the pendulum.

23. Run the QUARC controller using the Run button on the Simulation tab.

24. Gradually increase the swing-up gain, ke, in the `Slider Gain` block, until the pendulum swings up into the vertical position. Take a screenshot of the scopes demonstrating the swing-up and balancing behaviour in the *Pendulum (deg)*, *Pendulum Energy (mJ),* and *Vm (V)* scopes. Record the swing-up gain that was required.

25. Stop and close your model. Ensure you save a copy of the files for review later.

26. Close Quanser Interactive Labs.