Kingbright

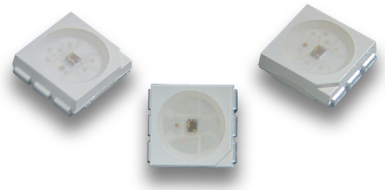

AAAF5050-MC-K12

5.0 x 5.0 mm Surface Mount LED Lamp

DESCRIPTIONS

- VDD Input Voltage: 3.5-5.5V
- An intelligent control LED light source that integrates the control circuit and RGB chips in a 5050 package for a complete control of pixel point
- Data protocol uses unipolar NRZ communication mode
- The control chip integrated in the LED enables a simple circuit, small size, and convenient installation
- Electrostatic discharge and power surge could damage the LEDs
- It is recommended to use a wrist band or anti-electrostatic glove when handling the LEDs
- All devices, equipments and machineries must be electrically grounded

FEATURES

- The control circuit and the LED share the same power source
- Intelligent protection against reverse connection
- Built-in electric reset and power lost reset circuit
- 256-level grayscale adjustable circuit
- Built-in signal reshaping circuit
- Cascade port transmission signal by single line
- Moisture sensitivity level: 3
- Package: 500pcs / reel
- Halogen-free
- RoHS compliant

APPLICATIONS

- Decorative and entertainment lighting
- Full color soft light strip
- Commercial and residential architectural lighting
- Signage applications

ATTENTION

Observe precautions for handling electrostatic discharge sensitive devices

PIN CONFIGURATION

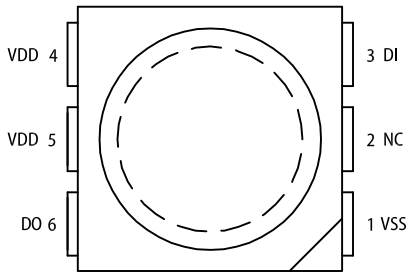

PACKAGE DIMENSIONS

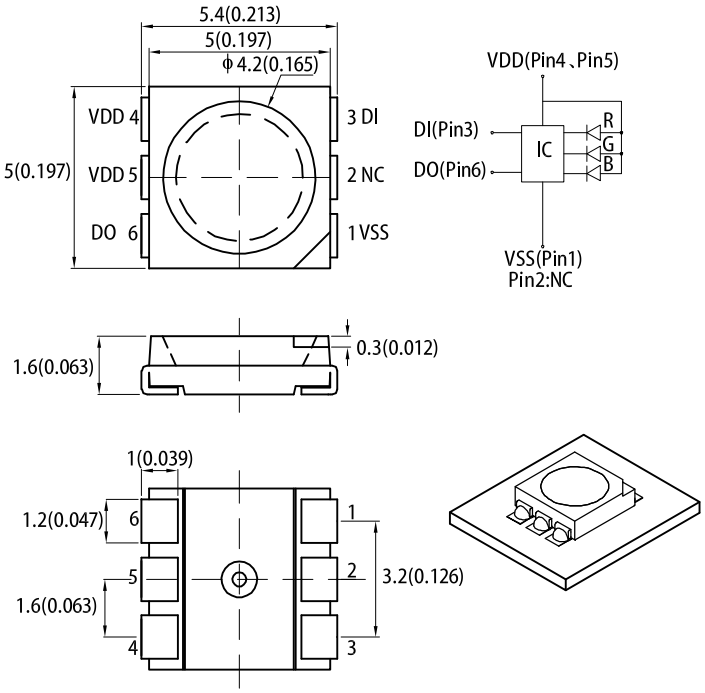

RECOMMENDED SOLDERING PATTERN

(units : mm; tolerance : ± 0.1)

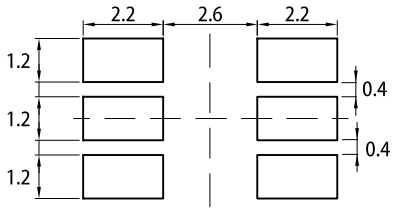

Notes:
1. All dimensions are in millimeters (inches).
2. Tolerance is ±0.2(0.008") unless otherwise noted.
3. The specifications, characteristics and technical data described in the datasheet are subject to change without prior notice.
4. The device has a single mounting surface. The device must be mounted according to the specifications.

PIN FUNCTION

No.	Symbol	Function Description
1	VSS	Ground
2	NC	/
3	DI	Control data signal input
4	VDD	Power supply LED
5	VDD	Power supply LED
6	DO	Control data signal output

© 2023 Kingbright. All Rights Reserved.

SELECTION GUIDE

Part Number	Emitting Color (Material)	Lens Type	Peak Wavelength (nm)	Dominant Wavelength (nm)	Iv (mcd) @ V_{DD} = 5V, Gray Scale Level = 255 [2]		Viewing Angle [1]
			Typ.	Typ.	Min.	Typ.	2θ1/2
AAAF5050-MC-K12	Hyper Red (AlGaInP)	Water Clear	640	625	200	360	120°
	Green (InGaN)		515	525	400	600	
	Blue (InGaN)		460	465	80	150	

Notes:
1. θ1/2 is the angle from optical centerline where the luminous intensity is 1/2 of the optical peak value.
2. Luminous intensity / luminous flux: +/-15%.
3. Luminous intensity value is traceable to the CIE 27-2007 compliant national standards.

ABSOLUTE MAXIMUM RATINGS at T_A=25°C

Parameter	Symbol	Ratings	Unit
Power Supply Voltage	V_{DD}	5.5	V
Operating Temperature	T_{op}	-40 to +85	°C
Storage Temperature	T_{stg}	-40 to +115	°C
ESD Voltage	V_{ESD}	±2K	V

ELECTRICAL CHARACTERISTICS (T_A=25°C,V_{DD}=5V,V_{SS}=0V,unless otherwise specified)

Parameter	Symbol	Conditions	Min.	Typ.	Max.	Unit
Supply Voltage	V_{DD}	-	3.5	5	5.5	V
Static Current	I_{DD}	-	-	0.5		mA
R/G/B Current	I_{RGB}	-	-	12	-	mA
Input High Voltage	V_{IH}	-	-	3.5	-	V
Input Low Voltage	V_{IL}	-	-	-	1.5	V

RoHS © 2023 Kingbright. All Rights Reserved.

SWITCHING CHARACTERISTICS at T_A=25°C

Parameter	Symbol	Conditions	Min.	Typ.	Max.	Unit
R/G/B PWM Frequency	f_{PWM}	-	-	1	-	kHz
Data Transmission Rate	f_{DIN}	-	-	800	-	kbps
Propagation Delay Time	t_{PLH}	DIN to DOUT	-	80	-	ns
	t_{PHL}		-	80	-	ns
DOUT Rise Time	t_{TLH}	-	-	10	-	ns
DOUT Fall Time	t_{THL}		-	12	-	ns

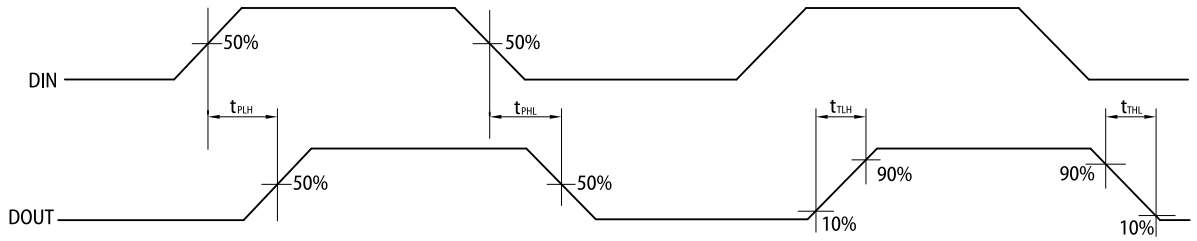

CODE CHARACTERISTICS

0 code, high voltage time	t_{0H}	300ns	±100ns
0 code, low voltage time	t_{0L}	900ns	±100ns
1 code, high voltage time	t_{1H}	900ns	±100ns
1 code, low voltage time	t_{1L}	300ns	±100ns
Reset code, low voltage time	t_{RES}	>200μs	-

SEQUENCE CHART

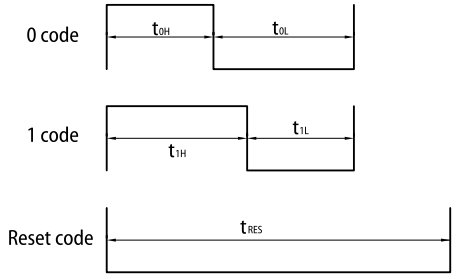

CASCADE METHOD

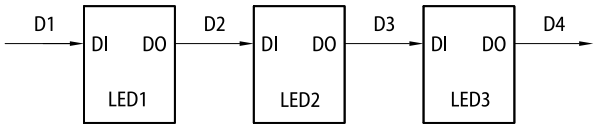

© 2023 Kingbright. All Rights Reserved.

DATA TRANSMISSION METHOD

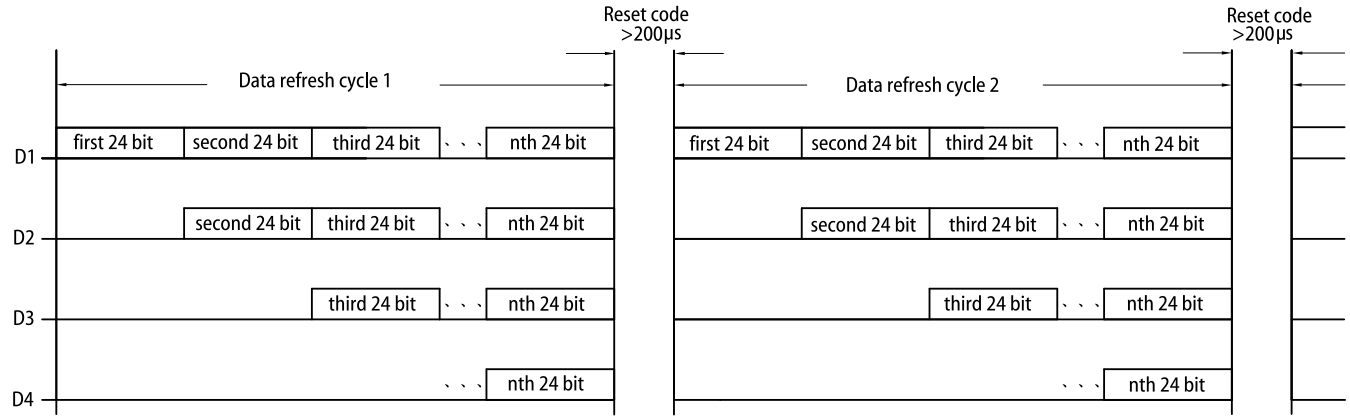

Note: The data of D1 is sent by MCU, and D2,D3,D4 through pixel internal reshaping amplification to transmit.

TYPICAL APPLICATION CIRCUIT

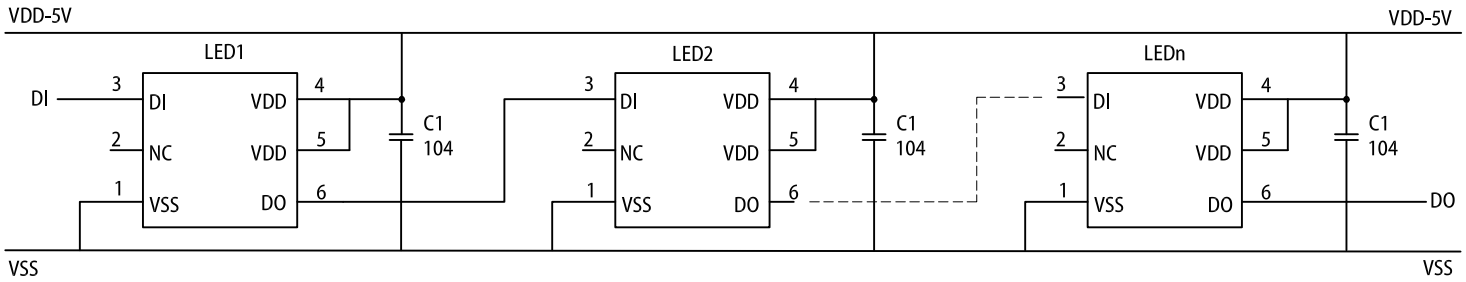

COMPOSITION OF 24BIT DATA

G7	G6	G5	G4	G3	G2	G1	G0	R7	R6	R5	R4	R3	R2	R1	R0	B7	B6	B5	B4	B3	B2	B1	B0

Note: Follow the order of GRB to send data and the high bit is sent first.

TECHNICAL DATA

REFLOW SOLDERING PROFILE for LEAD-FREE SMD PROCESS

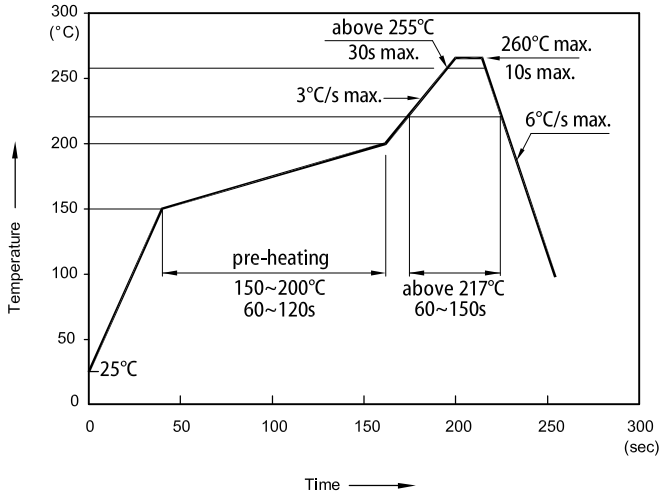

Notes:
1. Don't cause stress to the LEDs while it is exposed to high temperature.
2. The maximum number of reflow soldering passes is 2 times.
3. Reflow soldering is recommended. Other soldering methods are not recommended as they might cause damage to the product.

TAPE SPECIFICATIONS (units : mm)

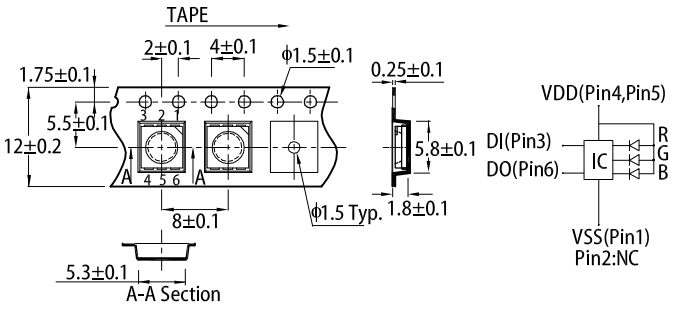

REEL DIMENSION (units : mm)

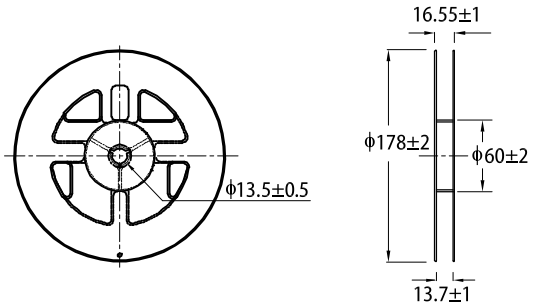

RoHS © 2023 Kingbright. All Rights Reserved.

PACKING & LABEL SPECIFICATIONS

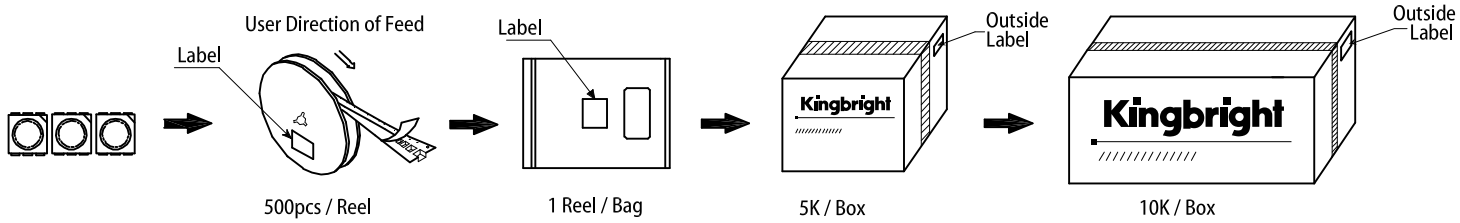

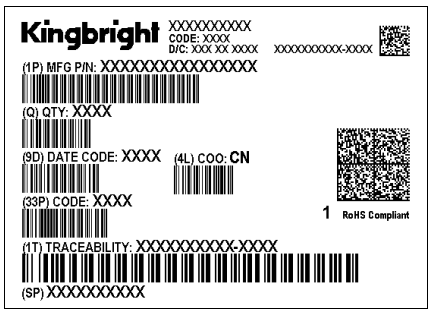

HANDLING PRECAUTIONS

Compare to epoxy encapsulant that is hard and brittle, silicone is softer and flexible. Although its characteristic significantly reduces thermal stress, it is more susceptible to damage by external mechanical force. As a result, special handling precautions need to be observed during assembly using silicone encapsulated LED products. Failure to comply might lead to damage and premature failure of the LED.

1. Handle the component along the side surfaces by using forceps or appropriate tools.

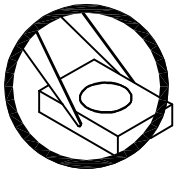

2. Do not directly touch or handle the silicone lens surface. It may damage the internal circuitry.

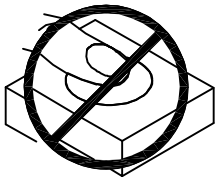

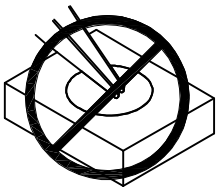

3. Do not stack together assembled PCBs containing exposed LEDs. Impact may scratch the silicone lens or damage the internal circuitry.

4-1. The inner diameter of the SMD pickup nozzle should not exceed the size of the LED to prevent air leaks.

4-2. A pliable material is suggested for the nozzle tip to avoid scratching or damaging the LED surface during pickup.

4-3. The dimensions of the component must be accurately programmed in the pick-and-place machine to insure precise pickup and avoid damage during production.

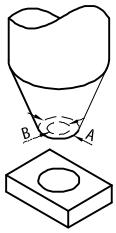

5. As silicone encapsulation is permeable to gases, some corrosive substances such as H_2S might corrode silver plating of leadframe. Special care should be taken if an LED with silicone encapsulation is to be used near such substances.
6. LED shall be air sealed when used in environments where abundant moisture or corrosive substances such as sulfur are present.

PRECAUTIONARY NOTES

1. The information included in this document reflects representative usage scenarios and is intended for technical reference only.
2. The part number, type, and specifications mentioned in this document are subject to future change and improvement without notice. Before production usage customer should refer to the latest datasheet for the updated specifications.
3. When using the products referenced in this document, please make sure the product is being operated within the environmental and electrical limits specified in the datasheet. If customer usage exceeds the specified limits, Kingbright will not be responsible for any subsequent issues.
4. The information in this document applies to typical usage in consumer electronics applications. If customer's application has special reliability requirements or have life-threatening liabilities, such as automotive or medical usage, please consult with Kingbright representative for further assistance.
5. The contents and information of this document may not be reproduced or re-transmitted without permission by Kingbright.
6. All design applications should refer to Kingbright application notes available at https://www.KingbrightUSA.com/ApplicationNotes

RoHS © 2023 Kingbright. All Rights Reserved.

Mouser Electronics

Authorized Distributor

Click to View Pricing, Inventory, Delivery & Lifecycle Information:

Kingbright:

AAAF5050-MC-K12