Lab Procedure
Force Resistor

Introduction

Ensure the following:

1. You have reviewed the Application Guide – Force Resistor
2. Make sure the Mechatronic Sensors Trainer is out of its case; it is powered using the provided USB cable connected to the PC.
    a. The LED next to the USB C port will stay white after the touch screen starts loading.
    b. The load screen with the Quanser Logo should disappear after a few seconds and you should see some evenly spaced crosses on a black background on the touch screen.
3. Take the force resistor out of the sensors kit.
4. Have a multimeter.

Exploring Force Resistor Inputs

1. Use your multimeter to measure the resistance across the force resistor placed on a flat surface. Make sure to measure from the leads that will connect to the Sensors Trainer, use the small opening on the side where you can see the metal pin. Take more measurements as you apply force to it by pressing it between your fingers. How does the resistance change as you apply more force?
2. Launch Visual Studio Code or your preferred Python IDE. If using Visual Studio Code, click on **File** > **Open Folder**..., and browse to the directory containing the python files and lab procedure for the Force Resistor lab (.../sensors_trainer/1_fundamentals/force_resistor/hardware/python). Open this directory and then open **force_resistor.py**.
3. The following schematic shows the internal circuit in the Sensors Trainer for the force sensing resistor (FSR) input. The circuit is a voltage divider made up of an internal $10k\Omega$ resistor and a second resistor that we connect externally. In this lab, you will connect a force resistor with variable resistance R_F, and use the FSR input to measure the voltage V_F across the force resistor. Write the equation for the voltage V_F across the variable resistor with resistance R_F. Using your equation, what is V_F when $R_F = 0\Omega$? What is V_F when $R_F = 100k\Omega$? $R_F = 1000k\Omega$?

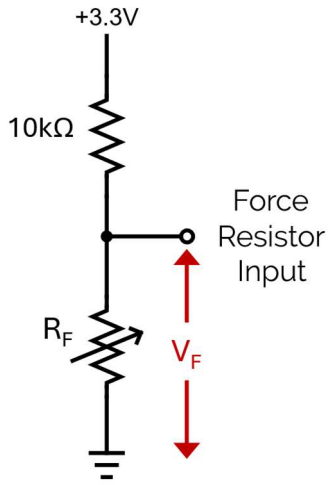

4. Connect the two terminals of the force resistor to the force resistor input, and ground pins, which are the leftmost GPIO pins on the device. The resistor input should be marked as *FORCE RES* or *FSR* depending on the case. See the image below:

5. Run the script by clicking the play button ▷ at the top right corner of the code editor. This will open a **Force Resistor** scope displaying the readings from the force resistor. The code also prints the values of the force resistor input to the terminal output.

6. Observe the scope and terminal output while pressing on the force resistor in different ways. Try pressing on the force resistor while it is placed on a flat surface, pressing between your fingers, pressing while slightly bending it, and pressing on the edges of the resistor. How do each of these affect the voltage across the force resistor?

7. Stop the script by clicking back on the terminal in Visual Studio Code, then pressing **Ctrl + C**, and then clicking enter when prompted in the terminal.

8. Disconnect the force resistor from the Sensors Trainer and reconnect it with reversed terminal connections to the Sensors Trainer. Repeat steps 5-7. Does this affect the voltage signal across the force resistor? Why?

9. Open the datasheet for the force resistor, located in the directory …/sensors_trainer/1_fundamentals /force_resistor. Refer to the specification table in the datasheet and report the force range of the force resistor model FSR F02. Why is the force range important when selecting a force resistor?

10. Refer to the circuit diagram at the end of the datasheet. How does this differ from the way that the force resistor is connected to the Sensors Trainer as per the previously shown picture? How does this affect the measured voltage?

Exploring Force Resistor Control

11. In this section, you will explore ways to use a force resistor's input to control the LED on the back of the device. How you would use the force resistor input to turn an LED ON when a minimum amount of force has been applied to the force resistor.

12. In force_resistor.py, uncomment the if-else statement (4 lines of code) under the comment **`# Turn on colour sensor LED based on the force resistor input.`** Highlighting the lines and then using the shortcut **Ctrl + /** , it should toggle between commenting and uncommenting.

13. The function **`sensors.write_led(rgb=0.5)`** writes values of 0.5 to each of the red, green, and blue channels of the LED. Modify the condition inside the statement **`if (True):`** to turn on the LED when a force has been applied.

14. Run the script and test it out by pressing the force resistor. How would changing the force threshold affect the behavior of your code? What is the trade-off to consider when changing the force threshold? Stop the script.

15. Comment out the 4 lines of code that were uncommented in step 12.

16. Now, you will use the force resistor input to control the brightness of the LED. The **`rgb`** parameter in the function **`sensors.write_led(rgb=0.5)`** sets the brightness of the LED. It takes values between 0 and 1, where 1 is the maximum brightness. Under the comment **`# set LED brightness based on force resistor input`**, add code to set the LED brighter as the force increases. Run your code and press on the force resistor to test it out. Stop the script.

17. Consider the following plot showing how resistance changes with applied force in a typical force sensing resistor (not the exact resistor that you are using for this lab). Compared to a linear force-resistance relationship, why is it difficult to obtain an exact value for the applied force using a force sensing resistor where the relationship is non-linear?

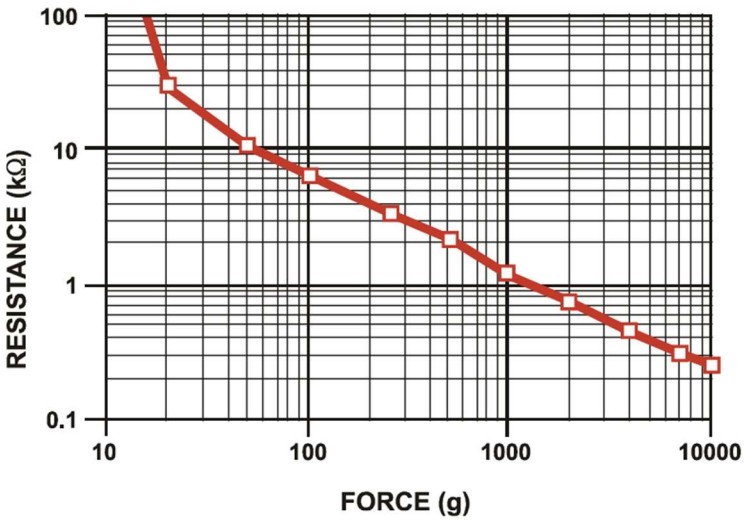

Figure from: https://cdn.sparkfun.com/assets/e/3/b/3/8/force_sensing_resistor_guide.pdf

18. Stop, save and close your program.

19. Power OFF the Mechatronic Sensors Trainer by disconnecting its USB C cable, disconnect any external sensors and pack them along the base and the USB cables in the provided case.