QArm Lab Procedure
Basic I/O

Setup

1. Launch Quanser Interactive Labs and load the QArm Workspace.
2. Launch MATLAB and browse to the working directory for Lab 0 – Basic I/O.

Position Mode

1. Open the Simulink model BasicIO_position_mode.slx (Figure 1). You will use the model to apply position commands to the base, shoulder, elbow, and wrist joints, in addition to controlling the gripper. The model also acquires and displays a variety of sensor feedback.

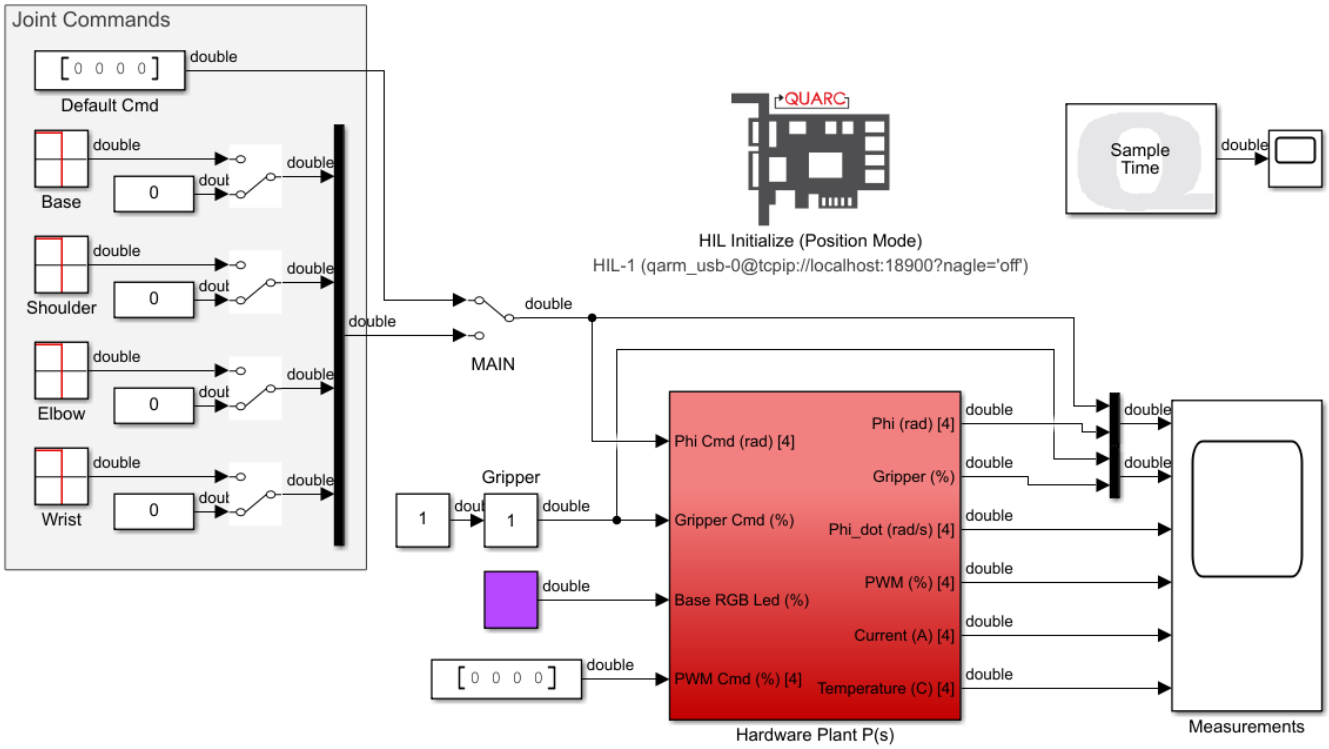

Figure 1: Simulink model that controls the QArm in position mode

2. Prior to running the model, open the model's Configuration Parameters and verify that they are configured as follows:
   a. Solver type: Fixed-step
   b. Solver: ode4 (Runge-Kutta)
   c. Fixed-step size (fundamental sample time): 500 Hz
3. Ensure Default Cmd is set to [0 0 0 0] and the manual switch labeled MAIN is set to pass the vector Default Cmd to the Hardware Plant P(s) subsystem.

4. Run the model using the green Play button under the Simulation Tab of your model. Once started, the model will command 0 rad angles to all four of the manipulator's joints.

5. Using the Default Cmd vector, command small positive angles (e.g. +0.25 rad) to each of the joints and determine the positive convention/direction of the manipulator joints.

6. Using the Gripper constant, operate the gripper and verify that a command of 0 fully opens and a command of 1 fully closes the gripper. A command of 0.5 should close the gripper half-way.

7. Using the Color constant, verify that you can command different colors to the base LED.

8. Toggle the manual switch labeled MAIN away from Default Cmd to enable commanding each of the joints a square waveform. Using the Measurements scope verify that each joint follows the commanded setpoint. Sample results are shown in Figure 2.

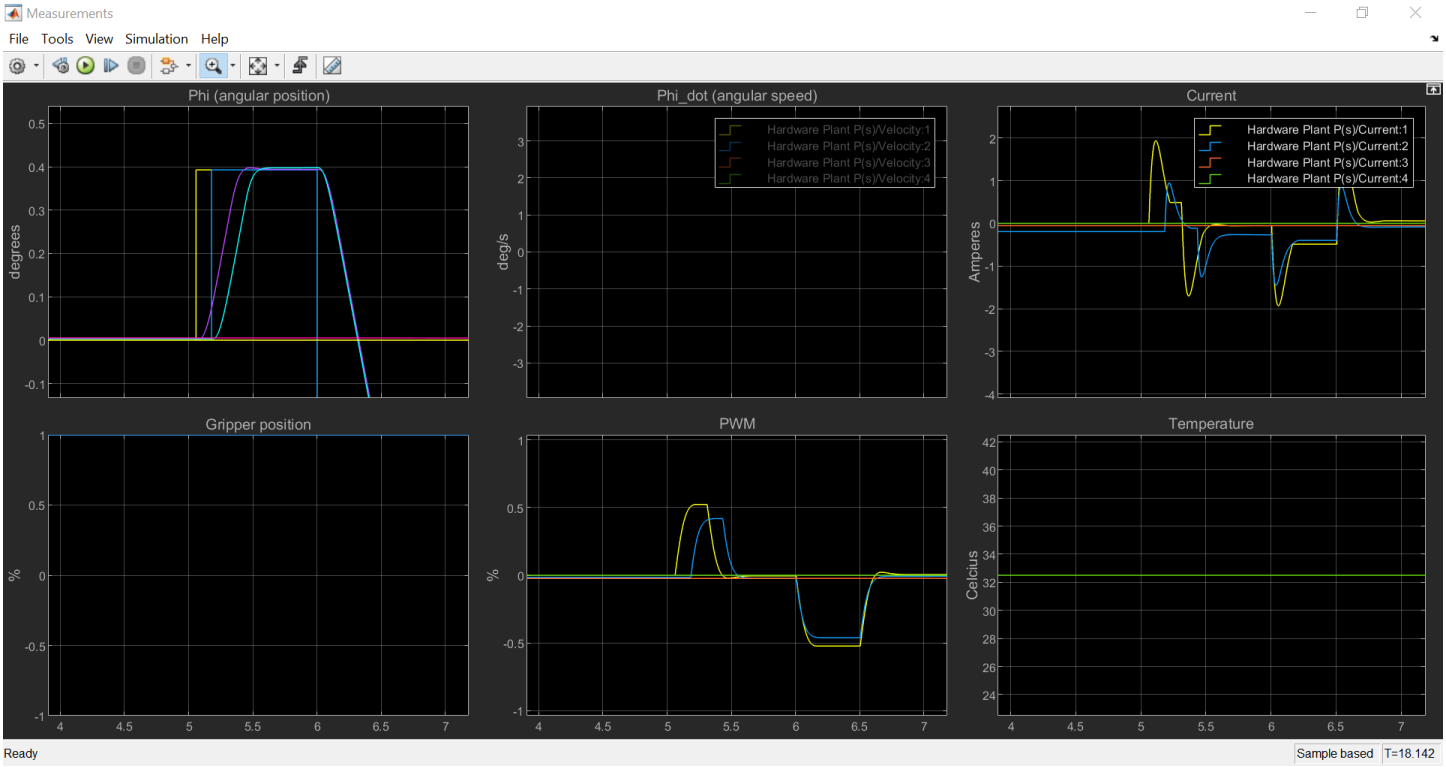

Figure 2: Sample results showing the base and shoulder joints following commanded setpoints

9. Finally, monitor the output of the Sample Time block to verify that your model can maintain the fixed-step size that you defined earlier for your model.

10. If no further experiment is required, use the manual switch labeled MAIN to move the manipulator to its home position.

11. Stop the model.

PWM Mode

1. Open the Simulink model BasicIO_pwm_mode.slx (Figure 3). You will use this model to command PWM signals to each joint of the manipulator, causing the joint controllers to output a proportional voltage ranging between -12V and 12 V.

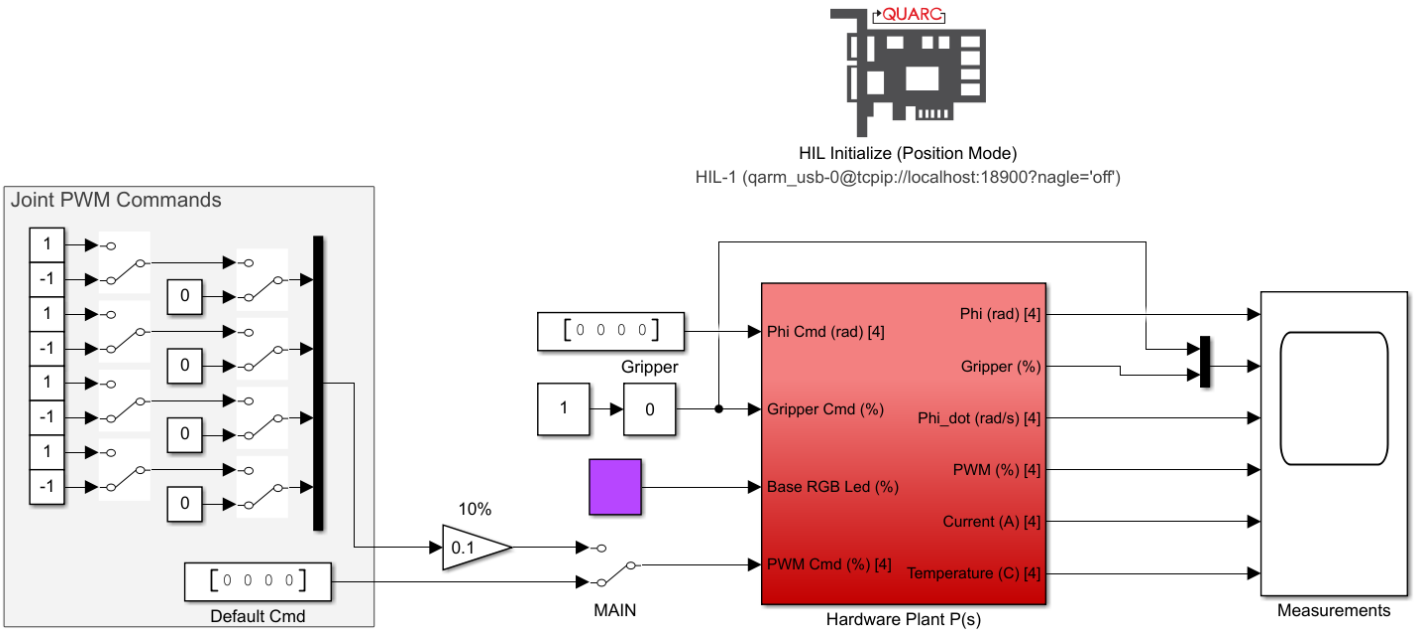

Figure 3: Simulink model that controls the QArm in PWM mode

2. Prior to running the model, open the model's Configuration Parameters and verify that they are configured as follows:

    a. Solver type: Fixed-step

    b. Solver: ode4 (Runge-Kutta)

    c. Fixed-step size (fundamental sample time): 500 Hz

3. Ensure Default Cmd is set to [0 0 0 0] and the manual switch labeled MAIN is set to pass the vector Default Cmd to the Hardware Plant P(s) subsystem.

4. Run the model using the green Play button under the Simulation tab of your model. Once started, the model will command PWM signals with a duty cycle of 0% to each of the joints, and the manipulator will slowly fall

5. Toggle the manual switch labeled MAIN away from Default Cmd. Then using the toggle switches found under Joint PWM Commands, command a series of PWM signals to each joint to verify that the response matches the positive convention noted in the previous section. For example, does commanding the base joint a positive PWM signal cause it to rotate in the same direction as commanding it a positive angle in position mode?

6. Unlike in position mode, which utilizes the manipulator's built-in PID controllers, in PWM mode, each joint is controlled in an open-loop fashion. This makes it challenging to navigate to and maintain a desired position. To explore this difference, reset the arm to the home position then attempt to maintain the home pose. Based on the positive convention that you determined earlier, first estimate the PWM commands required to complete the two-step process. Toggle the manual switch labeled MAIN to Default Cmd and use it to enter your values. Make a note of the commanded PWM signals.

7. If no further experiment is required, set Default Cmd to [0 0 0 0].

8. Stop the model and close Quanser Interactive Labs