Lab Procedure for Simulink
Play

Keyboard Control

Your keyboard is used in the labs to control the virtual QBot. To be enable the movement of the QBot, press and hold the **Space Bar** to arm the motors, and release it to brake. The movement of robot is controlled via "**WASD**" keys and "**IJKL**" keys. Pressing and holding a movement key gradually increases the speed in the associated direction until the limit is reached, and the speed is maintained after releasing the movement key. By using movement keys in opposite directions, the speeds of the QBot can be fine tuned, and they can be reset by releasing the **Space Bar**. The "**7**" key is occasionally used to turn on and off additional features implemented in the application, such as line following. Finally, press the "**U**" key if you wish to terminate the application.

Setup

1. It is recommended that you review Lab 1 – Application Guide before starting this lab.
2. Launch Quanser Interactive Labs, scroll to the "QBot Platform" menu item and then select the "Warehouse" world.

Note: In steps 3 to 5, we will go through some key parts of the model that will run on the QBot Platform (play.slx)

3. Open the Simulink Model play.slx, as shown in Figure 2. The loading of the Simulink model also triggers the setup script for Quanser Interactive Labs. When the script is run successfully, the QBot and the Environment should automatically spawn in Quanser Interactive Labs and user LEDs on the virtual QBot will pulse white, as shown in Figure 3.

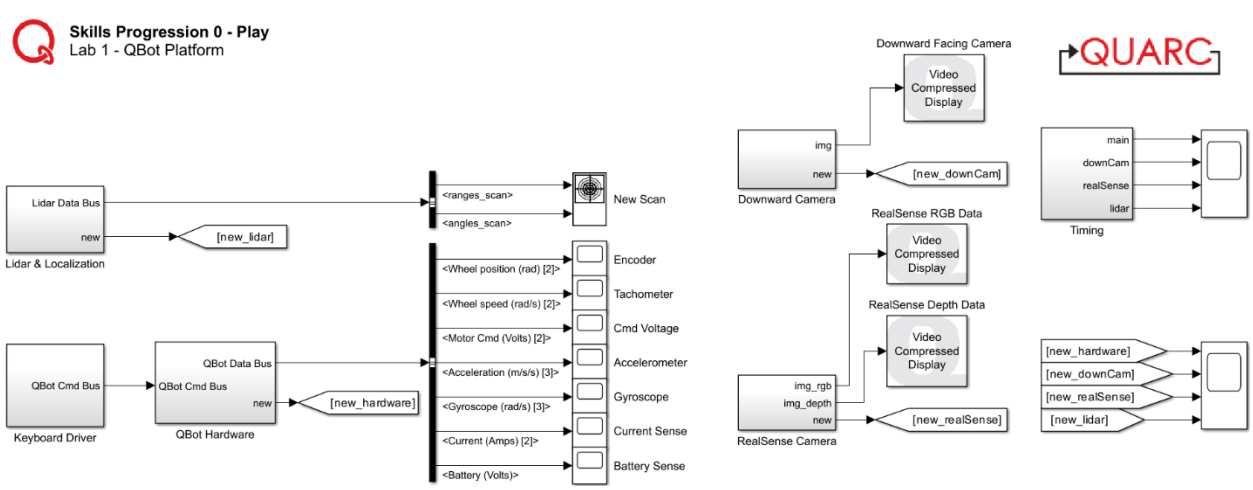

Figure. 2. Lab 1 Play Simulink Model

Figure 3. Successful set up of the Quanser Interactive Labs Workspace

4. Double click on **QBot Hardware** block to open the subsystem as shown in Figure 5. This subsystem communicates with the driver on the QBot via a **Stream Client** block. Speed commands from the keyboard, U key and Space Bar data are sent to the QBot, while sensor data is received. Notice that the "U" key triggers the termination of the Simulink model in this subsystem.

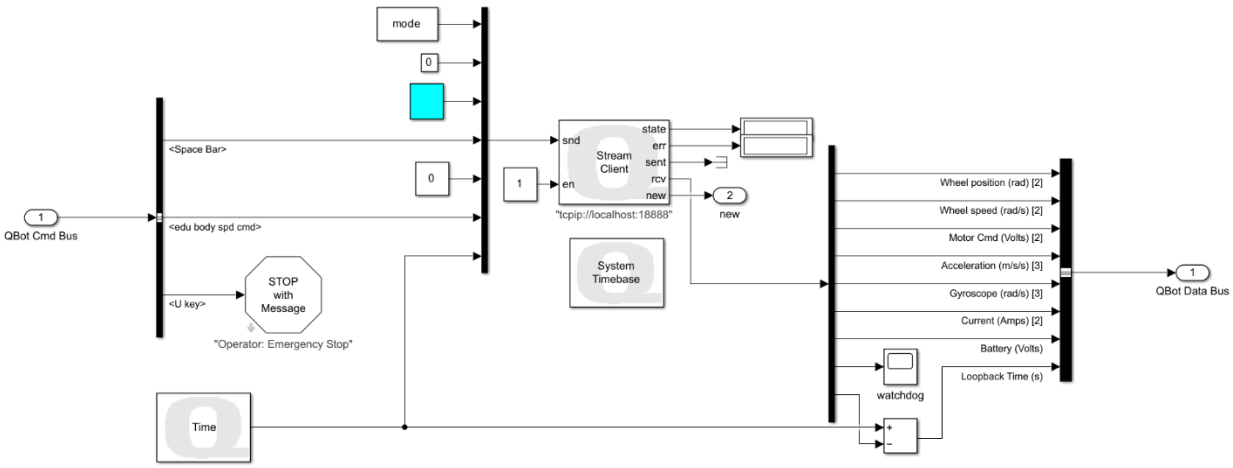

Figure. 5. QBot Hardware Subsystem

5. Click Run under the Simulation Tab of your model to run the code. When the model is run successfully, the user LEDs of the virtual QBot will turn blue.

Drive with Keyboard

1. Press and hold the Space Bar to arm the robot. Notice that the LEDs turn green. Keep this key pressed as you teleoperate the QBot for future labs as well.

   Note: If your robot is ever in a position where it may collide with obstacles, disarm the robot by releasing the Space Bar. The LEDs will turn blue again, indicating that the QBot Platform is disarmed.

2. While armed, use the following keys to move the QBot.

   a. press the "A" and "D" keys and determine the positive convention of the QBot body turn speed.

   b. press the "I" and "K" keys and determine the positive convention of the QBot body forward speed.

3. Observe through the Quanser Interactive Lab window, combine the keyboard commands, and drive the QBot freely.

4. Investigate different sensors that the QBot is equipped with as you drive the QBot.

   a. Double click on **Video Compressed Display** block labeled ***RealSense RGB Data*** to open RGB video feed from the front camera. Now try to navigate the QBot using only the video feed.

   b. Double Click on **Video Compressed Display** block labeled ***Downward Facing Camera*** and move the two camara feeds side by side. As you drive the QBot, take notes on the differences in the video quality.

   c. The QBot is also equipped with a LiDAR and a depth camera. LiDAR data is visualized using the **Polar Figure** block labeled ***New Scan***, and the depth camera data is visualized using **Video Compress Display** block labeled ***RealSense Depth Data***. Analyse the LiDAR sensor and depth camera output and document your observations.

   d. Explore driving QBot with different combinations of data feeds. Reflect on your experience and take notes of the usefulness and limitations of each data type in navigation.

5. Stop the Simulink model when complete. Ensure that you save a copy of your completed files for review later. Close Quanser Interactive Labs.