Lab Procedure for Simulink
Play

Controller Introduction

A LogitechF710 wireless controller is used in the labs to control the QBot remotely. Before use, **always make sure the switch on top is in the X position and that the LED next to the Mode button is off**.

To be able to move the QBot, the left button (**LB**) will need to be pressed and held to arm the motors. Both joysticks are used to control the movement of the QBot. The **A** button is occasionally used to turn on and off additional features implemented in the application, such as line following. Finally, press the right button (**RB**) if you wish to terminate the application. Key bindings for the controller are shown in Figure 1.

Figure 1. Logitech Controller key bindings

Setup

1. It is recommended that you review Lab 1 – Application Guide before starting this lab.
2. Turn on the QBot Platform by pressing the power button once. To ensure the robot is ready for the lab, check the following conditions.
    a. The LEDs on the robot base should be solid red.

b. The LCD should display the battery level. It is recommended that the battery level is over 12.5V.

c. The Logitech F710 joystick's wireless receiver is connected to the QBot Platform as shown in Figure 2.

d. Make sure your computer is connected to the same network that the QBot Platform is on. If using the provided router, the network should be `Quanser_UVS-5G`.

e. Test connectivity to the QBot, using the IP displayed in the robot's LCD display, enter the following command in your local computer terminal and hit enter: `ping 192.168.2.x`

Figure 2. Controller Wireless Receiver connected to QBot Platform

3. Deploy and run qbot_platform_driver_physical on QBot Platform:

   a. Right click on qbot_platform_driver_physical.rt-linux_qbot_platform, select "Show more options", then select "Run on target".

   b. Change Target URI to: `tcpip://192.168.2.x:17000`

   c. Change Model Arguments to `-d /tmp -uri tcpip://192.168.2.x:17099`

   d. Click Run.

   e. The QBot Platform LEDs should pulse white if the driver is deployed and running successfully.

In steps 4 to 6, we will go through some key parts of the model that will run on the QBot Platform (play.slx)

4. Open the Simulink Model play.slx, as shown in Figure 3. Configure the model so that it can be deployed to the QBot Platform:

   a. Open Hardware Settings under the Hardware tab.

   b. Expand and browse to `Code Generation > Interface`.

   c. Change the MEX-file arguments to the following string including single quotes,

```
'-w -d /tmp -uri %u','tcpip://192.168.2.x:17001'
```

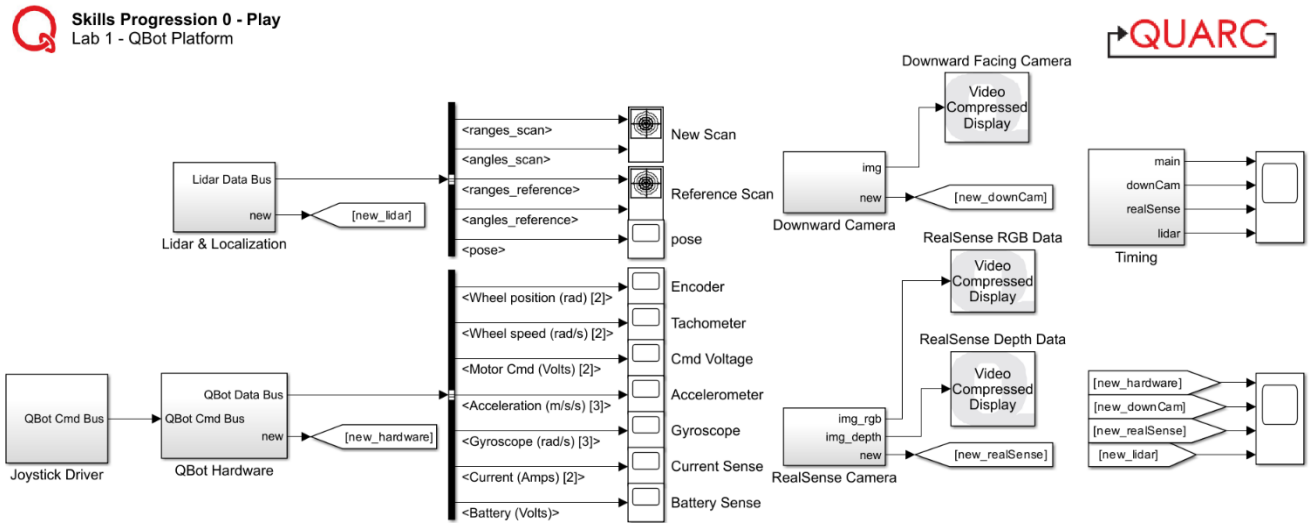

Figure 3. Lab 1 Play Simulink Model

5. Double click on **Joystick Driver** block to open the subsystem as shown in Figure 4. This subsystem processes the raw data coming from the controller and creates a data bus to send to the QBot Hardware Subsystem. Notice that the data from the joysticks are mapped to QBot speed commands in this subsystem.

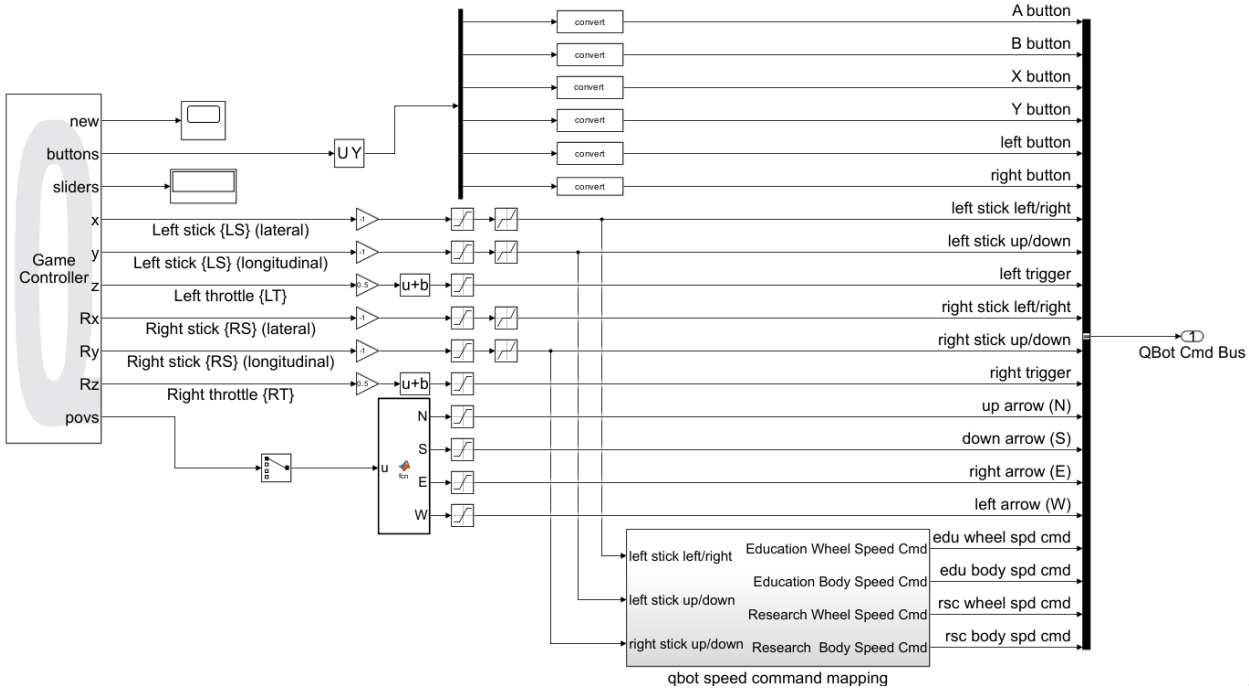

Figure 4. Joystick Driver Subsystem

6. Return to the main model and double click on **QBot Hardware** block to open the subsystem as shown in Figure 5. This subsystem communicates with the driver on the QBot via a **Stream Client** block. Speed commands from the joystick and left and right

button data are sent to the QBot, while sensor data is received. Notice that the right button triggers the termination of the Simulink model in this subsystem.

7. Click Monitor & Tune under the Hardware or QUARC Tab to deploy and run the model. When the model is run successfully, the user LEDs will turn blue.

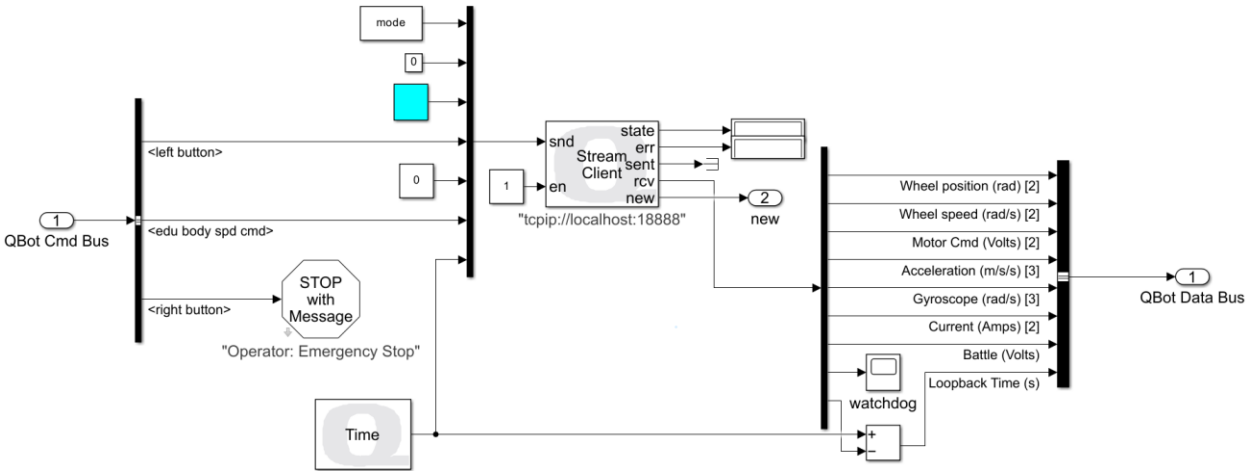

Figure 5. QBot Hardware Subsystem

Drive with Joystick

1. Press and hold the left button (labelled LB) to arm the robot. Notice that the LEDs turn green. Keep this button pressed as you teleoperate the QBot for future labs as well.

   Note: If your robot is ever in a position where it may collide with obstacles or people, disarm the robot by depressing the LB button (let go). The LEDs will turn blue again, indicating that the QBot Platform is disarmed.

2. While armed, use the following joystick sticks to move the QBot.

   a. move the left joystick left and right and determine the positive convention of the QBot body turn speed.

   b. move the right joystick up and down and determine the positive convention of the QBot body forward speed.

3. Walk with the QBot. Combine the joystick commands and navigate the QBot to the direction you are walking towards.

4. Investigate different sensors that the QBot is equipped with as you drive the QBot.

   a. Double click on **Video Compressed Display** block labeled ***RealSense RGB Data*** to open RGB video feed from the front camera. Now try to navigate the QBot using only the video feed.

b. Double Click on **Video Compressed Display** block labeled ***Downward Facing Camera*** and move the two camara feeds side by side. As you drive the QBot, take notes on the differences in the video quality.

c. The QBot is also equipped with a LiDAR and a depth camera. LiDAR data is visualized using the **Polar Figure** block labeled ***New Scan***, and the depth camera data is visualized using **Video Compress Display** block labeled ***RealSense Depth Data***. Analyse the LiDAR sensor and depth camera output and document your observations.

d. Explore driving QBot with different combinations of data feeds. Reflect on your experience and take notes of the usefulness and limitations of each data type in navigation.

5. Stop the Simulink model when complete. Ensure that you save a copy of your completed files for review later.

6. Turn OFF the robot by single pressing the power button (do not keep it pressed until it turns off). Post shutdown, all the LEDs should be completely OFF.