Lab Procedure for Simulink
Forward Kinematics

Setup

1. It is recommended that you review Lab 1 – Application Guide before starting this lab.

2. Launch Quanser Interactive Labs, scroll to the "QBot Platform" menu item and then select the "Warehouse" world.

3. Open the Simulink Model for_kin.slx, as shown in Figure 1. The loading of the Simulink model also triggers the setup script for Quanser Interactive Labs. When the script is run successfully, the QBot and the Environment should be spawn in Quanser Interactive Labs and User LEDs on the virtual QBot will turn white, as shown in Figure 2.

4. Click Run under the Simulation Tab of your model to run the code. When the model is run successfully, the QBot Platform LEDs will turn blue.

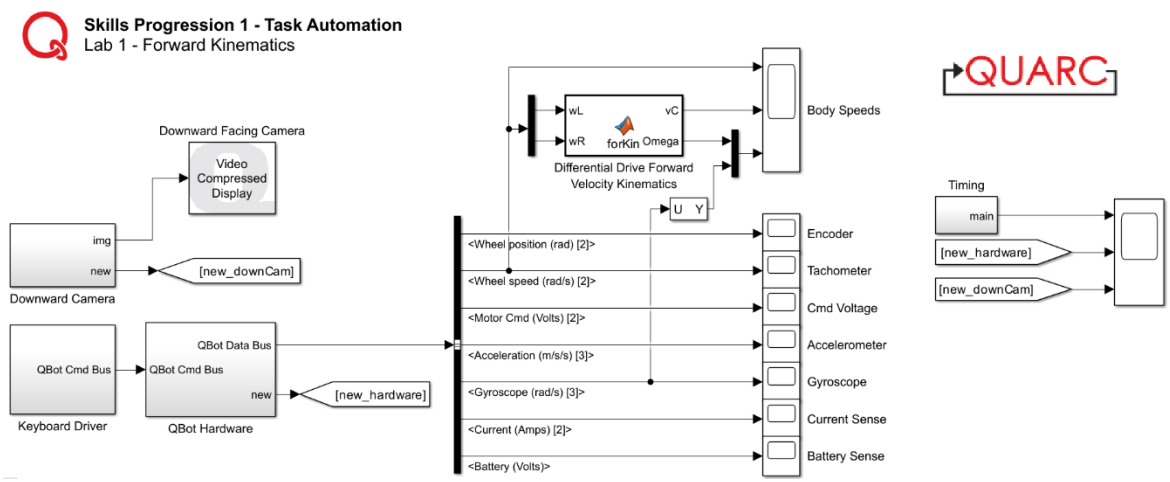

Figure 1. Lab 1 Forward Kinematics Simulink Model

Figure 2. Successful set up of the Quanser Interactive Labs Workspace

Drive with Individual Wheel Speeds Command

1. Press and hold the Space Bar to arm the robot. Notice that the LEDs turn green. Keep this key pressed as you teleoperate the QBot for future labs as well.

   Note: If your robot is ever in a position where it may collide with obstacles, disarm the robot by releasing the Space Bar. The LEDs will turn blue again, indicating that the QBot Platform is disarmed.

2. While armed, use the following keys to move wheels while monitoring the **QBot Body Speeds** scope. Take note of the wheel speeds, as well as what motion it produces for the QBot Platform body.

   a. press only the "W" and "S" keys and determine the positive convention of the left wheel speed.

   b. press only the "I" and "K" keys and determine the positive convention of the right wheel speed.

   c. combine the keys to drive the QBot around. Take note of the stick combination that produce the following results,

      i. forward or backward motion

      ii. turn in place clockwise or counterclockwise

3. What relationship do you observe between the wheel speeds and turn speed of the robot?

4. Look at the Quanser Interactive Labs window and use both wheels to control the QBot to follow the lines on the mat (straight or curved, or try both). Take notes on the challenges experienced during this activity.

5. Double Click on **Video Compressed Display** block labeled ***Downward Facing Camera*** to open the camera feed, as shown in Figure 3. Now, instead of looking at the Quanser Interactive Labs window, try making the robot follow the lines on the mat using only the downward facing camera feed (first-person-view). Document the strategies you utilized to follow the line and additional challenges faced when using only this camera feed.

Figure 3. Downward Facing Camera Feed

6. Stop the code by pressing the "U" key.

Forward Kinematics Formulation

1. Double click the **MATLAB Function** block labeled ***Differential Drive Forward Velocity Kinematics***. This MATLAB function is currently incomplete. When completed, it should take wheel speeds as input, and output QBot body forward speed and turn speed.

2. Using QBot physical dimensions included in QBot Platform User Manual, formulate the QBot forward kinematics equation via geometric derivation and complete the function.

3. Close the function, run your Simulink model, and drive the QBot around. Using the ***QBot Body Turn speeds*** scope, verify that the turn speeds output from your forward kinematics function closely matches that from the gyroscope. Revise your function if needed. When you're satisfied with the output of your function, take a screenshot of the scope window before shutting down the model. Observe the ***QBot Body Forward Speed*** scope to also monitor the forward speed.

4. What is the maximum forward or turn speed of the robot?

5. Stop the Simulink model when complete. Ensure that you save a copy of your completed files for review later. Close Quanser Interactive Labs.