Lab Procedure for Simulink
Forward Kinematics

Setup

1. It is recommended that you review Lab 1 – Application Guide before starting this lab.
2. Turn on the QBot Platform by pressing the power button once. To ensure the robot is ready for the lab, check the following conditions.
    a. The LEDs on the robot base should be solid red.
    b. The LCD should display the battery level. It is recommended that the battery level is over 12.5V.
    c. The Logitech F710 joystick's wireless receiver is connected to the QBot Platform. Before use, **always make sure the switch on top is in the X position and that the LED next to the Mode button is off.**
    d. Make sure your computer is connected to the same network that the QBot Platform is on. If using the provided router, the network should be `Quanser_UVS-5G`.
    e. Test connectivity to the QBot, using the IP displayed in the robot's LCD display, enter the following command in your local computer terminal and hit enter: `ping 192.168.2.x`
3. Deploy and run qbot_platform_driver_physical on QBot Platform:
    a. Right click on qbot_platform_driver_physical.rt-linux_qbot_platform, select "Show more options", then select "Run on target".
    b. Change Target URI to: `tcpip://192.168.2.x:17000`
    c. Change Model Arguments to `-d /tmp -uri tcpip://192.168.2.x:17099`
    d. Click Run.
    e. The QBot Platform LEDs should pulse white if the driver is deployed and running successfully.
4. Open the Simulink Model for_kin.slx, as shown in Figure 1. Configure the model so that it can be deployed to the QBot Platform:
    a. Open Hardware Settings under the Hardware ribbon in your model.
    b. Expand and browse to `Code Generation > Interface`.
    c. Change the MEX-file arguments to the following string including single quotes,

    `'-w -d /tmp -uri %u','tcpip://192.168.2.x:17001'`

5. Click Monitor & Tune in the Hardware or QUARC ribbon to deploy and run the model. When the model is run successfully, the QBot Platform LEDs will turn blue.

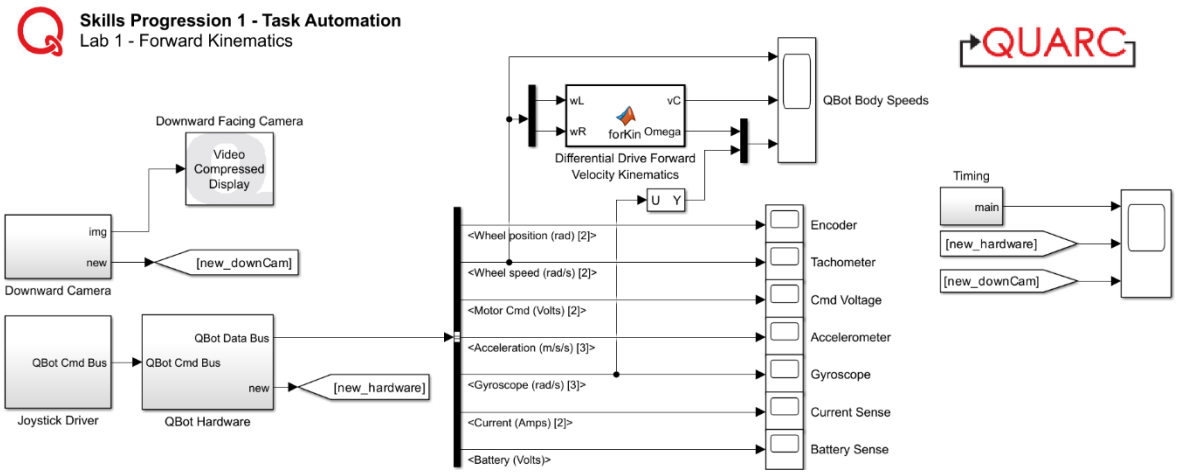

Figure 1. Lab 1 Forward Kinematics Simulink Model

Drive with Individual Wheel Speeds Command

1. Press and hold the left button (labelled LB) to arm the robot. Notice that the LEDs turn green. Keep this button pressed as you teleoperate the QBot for future labs as well.

   Note: If your robot is ever in a position where it may collide with obstacles or people, disarm the robot by depressing the LB button (let go). The LEDs will turn blue again, indicating that the QBot Platform is disarmed.

2. While armed, use the following joystick sticks to move wheels while monitoring the **QBot Body Speeds** scope. Take note of the wheel speeds, as well as what motion it produces for the QBot Platform body.

   a. move only the left stick up and down and determine the positive convention of the left wheel speed.

   b. move only the right joystick up and down and determine the positive convention of the right wheel speed.

   c. move both sticks to drive the QBot around. Take note of the stick combination that produce the following results,

      i. forward or backward motion

      ii. turn in place clockwise or counterclockwise

3. What relationship do you observe between the wheel speeds and turn speed of the robot?

4. Stand behind the robot and use the joystick to control the QBot to follow the lines on the mat (straight or curved or try both). Take notes on the challenges experienced during this activity.

5. Double Click on **Video Compressed Display** block labeled ***Downward Facing Camera*** to open the camera feed, as shown in Figure 2. Now, instead of walking behind the QBot, try making the robot follow the lines on the mat using only the downward facing camera feed (first-person-view). Document the strategies you utilized to follow the line and additional challenges faced when using only this camera feed.

Figure 2. Downward Facing Camera Feed

6. Stop the code by pressing the right button (RB) on the joystick.

Forward Kinematics Formulation

1. Double click the **MATLAB Function** block labeled ***Differential Drive Forward Velocity Kinematics***. This MATLAB function is currently incomplete. When completed, it should take wheel speeds as input, and output QBot body forward speed and turn speed.

2. Using QBot physical dimensions included in QBot Platform User Manual, formulate the QBot forward kinematics equation via geometric derivation and complete the function.

3. Close the function, run your Simulink model, and drive the QBot around, Using the ***QBot Body Turn speeds*** scope, verify that the turn speeds output from your forward kinematics function closely matches that from the gyroscope. Revise your function if needed. When you're satisfied with the output of your function, take a screenshot of the scope window before shutting down the model. Observe the ***QBot Body Forward Speed*** scope to also monitor the forward speed.

4. What is the maximum forward or turn speed of the robot?

5. Stop the Simulink model when complete. Ensure that you save a copy of your completed files for review later.

6. Turn OFF the robot by single pressing the power button (do not keep it pressed until it turns off). Post shutdown, all the LEDs should be completely OFF.