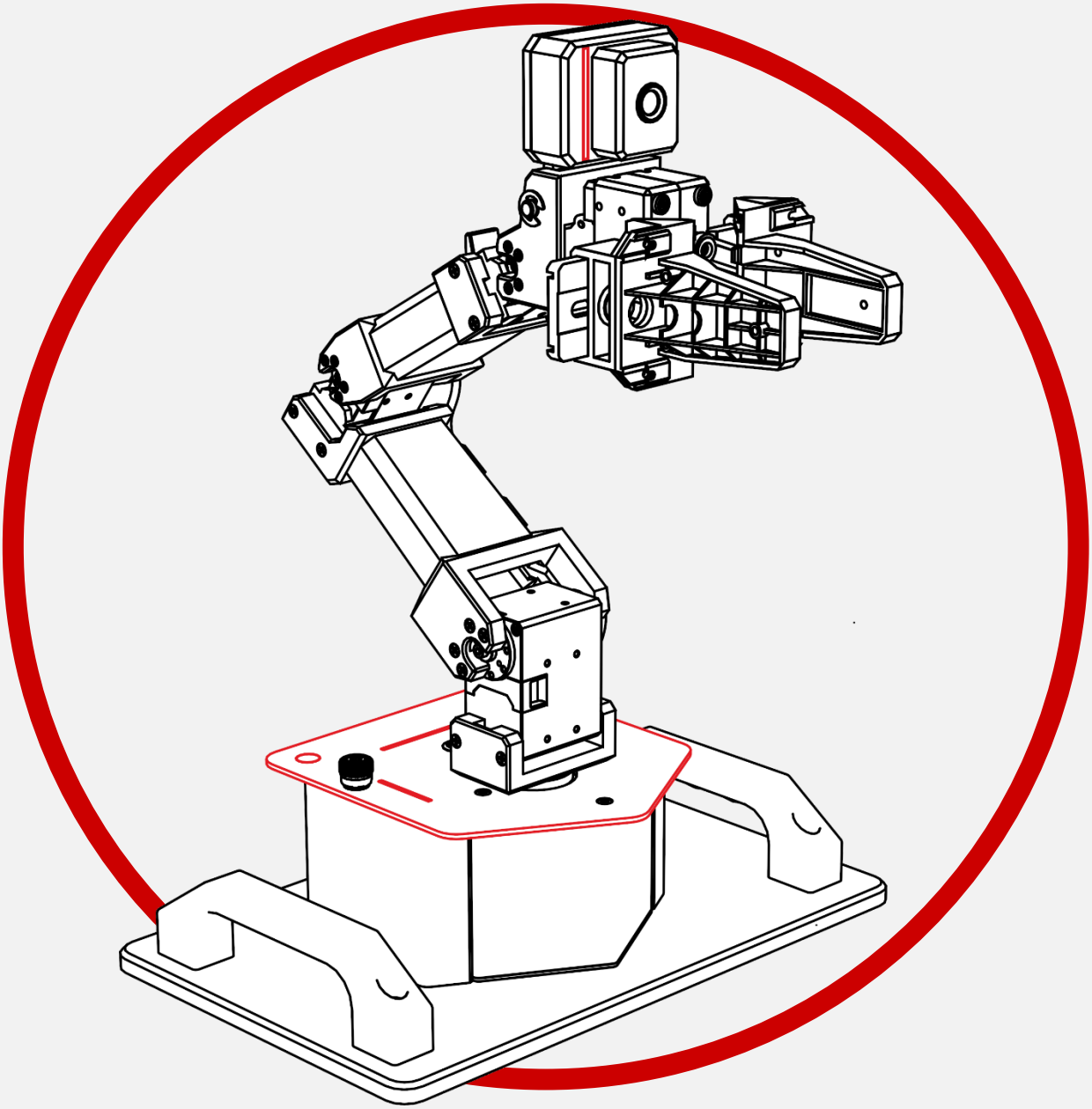

QArm Mini

Forward Kinematics

V1 – 13th March 2025

© 2025 Quanser Inc., All rights reserved.

Quanser Inc.
119 Spy Court
Markham, Ontario
L3R 5H6
Canada

info@quanser.com
Phone: 19059403575
Fax: 19059403576
Printed in Markham, Ontario.

For more information on the solutions Quanser Inc. offers, please visit the web site at:
http://www.quanser.com

This document and the software described in it are provided subject to a license agreement. Neither the software nor this document may be used or copied except as specified under the terms of that license agreement. Quanser Inc. grants the following rights: a) The right to reproduce the work, to incorporate the work into one or more collections, and to reproduce the work as incorporated in the collections, b) to create and reproduce adaptations provided reasonable steps are taken to clearly identify the changes that were made to the original work, c) to distribute and publicly perform the work including as incorporated in collections, and d) to distribute and publicly perform adaptations. The above rights may be exercised in all media and formats whether now known or hereafter devised. These rights are granted subject to and limited by the following restrictions: a) You may not exercise any of the rights granted to You in above in any manner that is primarily intended for or directed toward commercial advantage or private monetary compensation, and b) You must keep intact all copyright notices for the Work and provide the name Quanser Inc. for attribution. These restrictions may not be waved without express prior written permission of Quanser Inc.

QArm Mini – Application Guide

Forward Kinematics

What is Forward Kinematics?

Forward kinematics is the process of determining a manipulator's end-effector position and orientation based on its joint angles. In robotic systems, each joint's movement affects the overall configuration of the arm, making forward kinematics essential for predicting how the manipulator interacts with its environment. This mathematical relationship allows us to calculate where the end-effector will be relative to the robot's fixed base frame. Understanding forward kinematics is crucial for applications that require precise positioning, such as assembly, inspection, and welding.

In this lab, you will explore the practical applications of forward kinematics using the QArm Mini manipulator. You will map the robot's workspace—the set of all possible positions the end-effector can reach—and observe how joint movements influence its motion. This knowledge is applied in real-world tasks like lead-through welding, where the manipulator follows and replicates a path demonstrated by the operator.

Background

Prior to starting this lab, please review the following concept reviews (Located in Documents/Quanser/4_concept_reviews/),

- Concept Review – Robotics → Position Kinematics
- Concept Review – Robotics → Manipulator Lead Through

Getting started

In this lab, you will examine how joint angles determine the end-effector's position and orientation. The lab consists of two parts: mapping the manipulator's workspace and performing a lead-through welding task.

Ensure you have completed the following labs

- **Play Lab**

Before you begin this lab, ensure that the following criteria are met.

- If using a physical QArm Mini, make sure it is securely attached to the base and the manipulator is in the rest position. See the QArm Mini Quick Start Guide for details on this step.
- You are familiar with the basics of Simulink. See the Simulink Onramp for more help with getting started with Simulink.