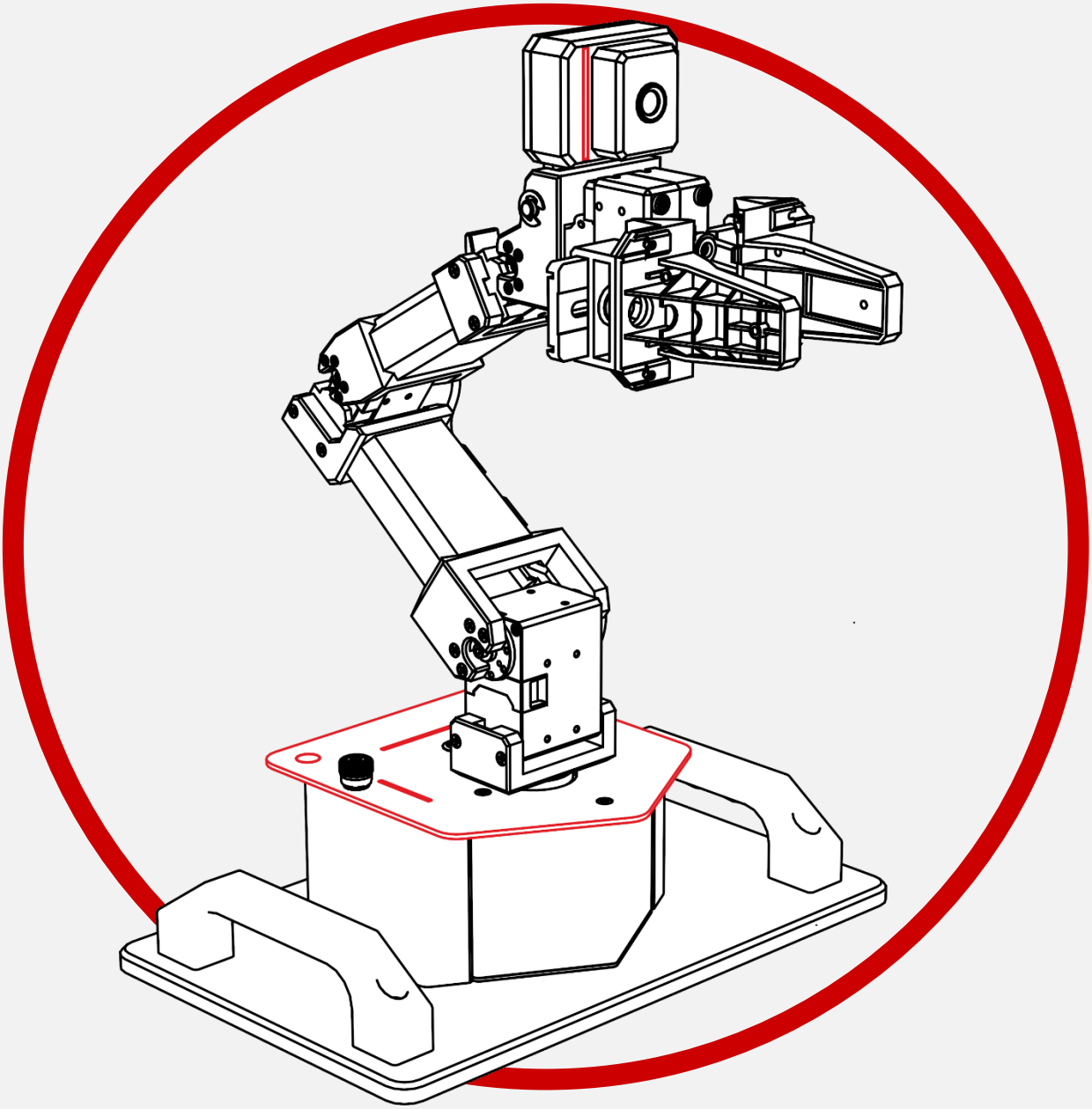

QArm Mini

Inverse Kinematics

V1 – 13th March 2025

© 2025 Quanser Inc., All rights reserved.

Quanser Inc.
119 Spy Court
Markham, Ontario
L3R 5H6
Canada

info@quanser.com
Phone: 19059403575
Fax: 19059403576
Printed in Markham, Ontario.

For more information on the solutions Quanser Inc. offers, please visit the web site at:
http://www.quanser.com

This document and the software described in it are provided subject to a license agreement. Neither the software nor this document may be used or copied except as specified under the terms of that license agreement. Quanser Inc. grants the following rights: a) The right to reproduce the work, to incorporate the work into one or more collections, and to reproduce the work as incorporated in the collections, b) to create and reproduce adaptations provided reasonable steps are taken to clearly identify the changes that were made to the original work, c) to distribute and publicly perform the work including as incorporated in collections, and d) to distribute and publicly perform adaptations. The above rights may be exercised in all media and formats whether now known or hereafter devised. These rights are granted subject to and limited by the following restrictions: a) You may not exercise any of the rights granted to You in above in any manner that is primarily intended for or directed toward commercial advantage or private monetary compensation, and b) You must keep intact all copyright notices for the Work and provide the name Quanser Inc. for attribution. These restrictions may not be waved without express prior written permission of Quanser Inc.

QArm Mini – Application Guide

Inverse Kinematics

What is Inverse Kinematics?

Inverse kinematics refers to the mathematical process of determining the joint angles of a robotic manipulator required to achieve a specific position and orientation of the end-effector. While forward kinematics calculates the end-effector's position from known joint angles, inverse kinematics works in reverse—starting with a desired location in task space and solving for the corresponding joint positions. This is essential for tasks where precise control of the end-effector's location is required, such as pick-and-place operations or assembly processes.

In this lab, you will explore the practical applications of inverse kinematics through two key activities: using a software-based teach pendant that guides the robot along predefined waypoints; and generating smooth trajectories using cubic splines. These techniques are commonly used in industrial automation for tasks requiring accuracy, repeatability, and controlled motion, such as welding or complex assembly lines.

Background

Prior to starting this lab, please review the following concept reviews (located in Documents/Quanser/4_concept_reviews/),

- Concept Review – Robotics → Position Kinematics
- Concept Review – Robotics → Trajectory Generation

Getting started

In this lab, the teach pendant allows you to record and replay Cartesian positions, while the trajectory generator ensures the manipulator follows a continuous path. Ensure you have completed the following labs

- **Play Lab**
- **Lab 1 – Forward Kinematics**

Before you begin this lab, ensure that the following criteria are met.

- If using a physical QArm Mini, make sure it is securely attached to the base and the manipulator is in the rest position. See the QArm Mini Quick Start Guide for details on this step.
- You are familiar with the basics of Simulink. See the Simulink Onramp for more help with getting started with Simulink.