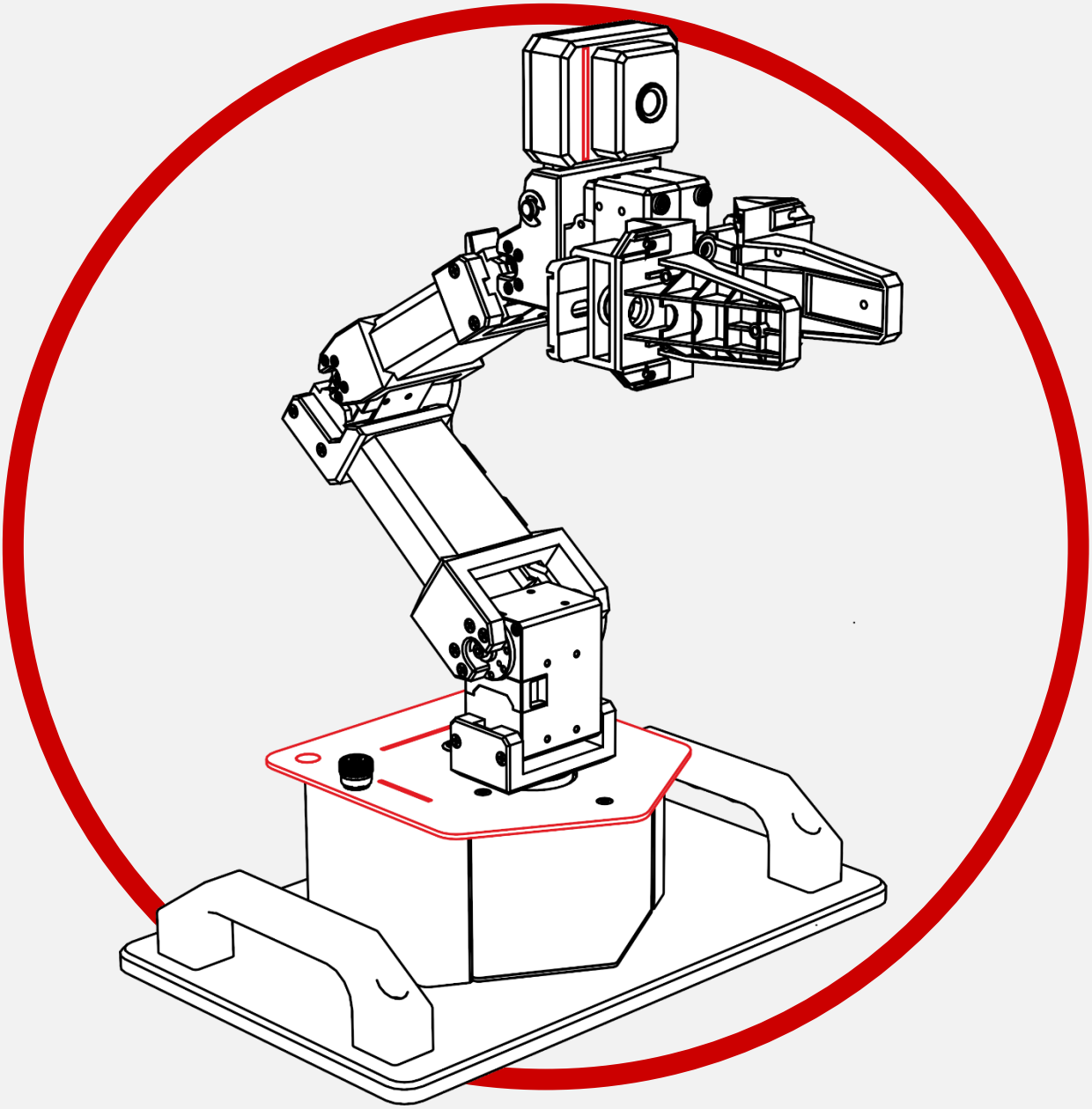

QArm Mini

Vision: Object Detection

V1 – 13th March 2025

© 2025 Quanser Inc., All rights reserved.

Quanser Inc.
119 Spy Court
Markham, Ontario
L3R 5H6
Canada

info@quanser.com
Phone: 19059403575
Fax: 19059403576
Printed in Markham, Ontario.

For more information on the solutions Quanser Inc. offers, please visit the web site at:
http://www.quanser.com

This document and the software described in it are provided subject to a license agreement. Neither the software nor this document may be used or copied except as specified under the terms of that license agreement. Quanser Inc. grants the following rights: a) The right to reproduce the work, to incorporate the work into one or more collections, and to reproduce the work as incorporated in the collections, b) to create and reproduce adaptations provided reasonable steps are taken to clearly identify the changes that were made to the original work, c) to distribute and publicly perform the work including as incorporated in collections, and d) to distribute and publicly perform adaptations. The above rights may be exercised in all media and formats whether now known or hereafter devised. These rights are granted subject to and limited by the following restrictions: a) You may not exercise any of the rights granted to You in above in any manner that is primarily intended for or directed toward commercial advantage or private monetary compensation, and b) You must keep intact all copyright notices for the Work and provide the name Quanser Inc. for attribution. These restrictions may not be waved without express prior written permission of Quanser Inc.

QArm Mini – Application Guide

Vision: Object Detection

Why Object Detection?

Object detection is a fundamental step in computer vision, enabling systems to identify and locate objects within images or videos. It is widely used in applications like autonomous navigation, object tracking, and industrial automation. By analyzing color information and image filters, object detection helps machines interpret and respond to their environment effectively.

Understanding how images are processed and the role of different color spaces is essential for accurate object detection. This lab introduces the basics of image filtering and object identification, laying the foundation for future tasks where the QArm Mini manipulator will detect, track, and interact with objects in its workspace.

Background

Prior to starting this lab, please review the following concept reviews (located in Documents/Quanser/4_concept_reviews/)

- Concept Review – Perception → Color Spaces
- Concept Review – Perception → Image Filters

Getting started

This lab focuses on understanding color spaces, applying image filters, and using these techniques to identify and locate objects in the video feed captured by the CSI camera on the QArm Mini. Ensure you have completed the following labs

- Play Lab

Before you begin this lab, ensure that the following criteria are met.

- If using a physical QArm Mini, make sure it is securely attached to the base and the manipulator is in the rest position. See the QArm Mini Quick Start Guide for details on this step.
- You are familiar with the basics of Simulink. See the Simulink Onramp for more help with getting started with Simulink.