QUANSER
INNOVATE · EDUCATE

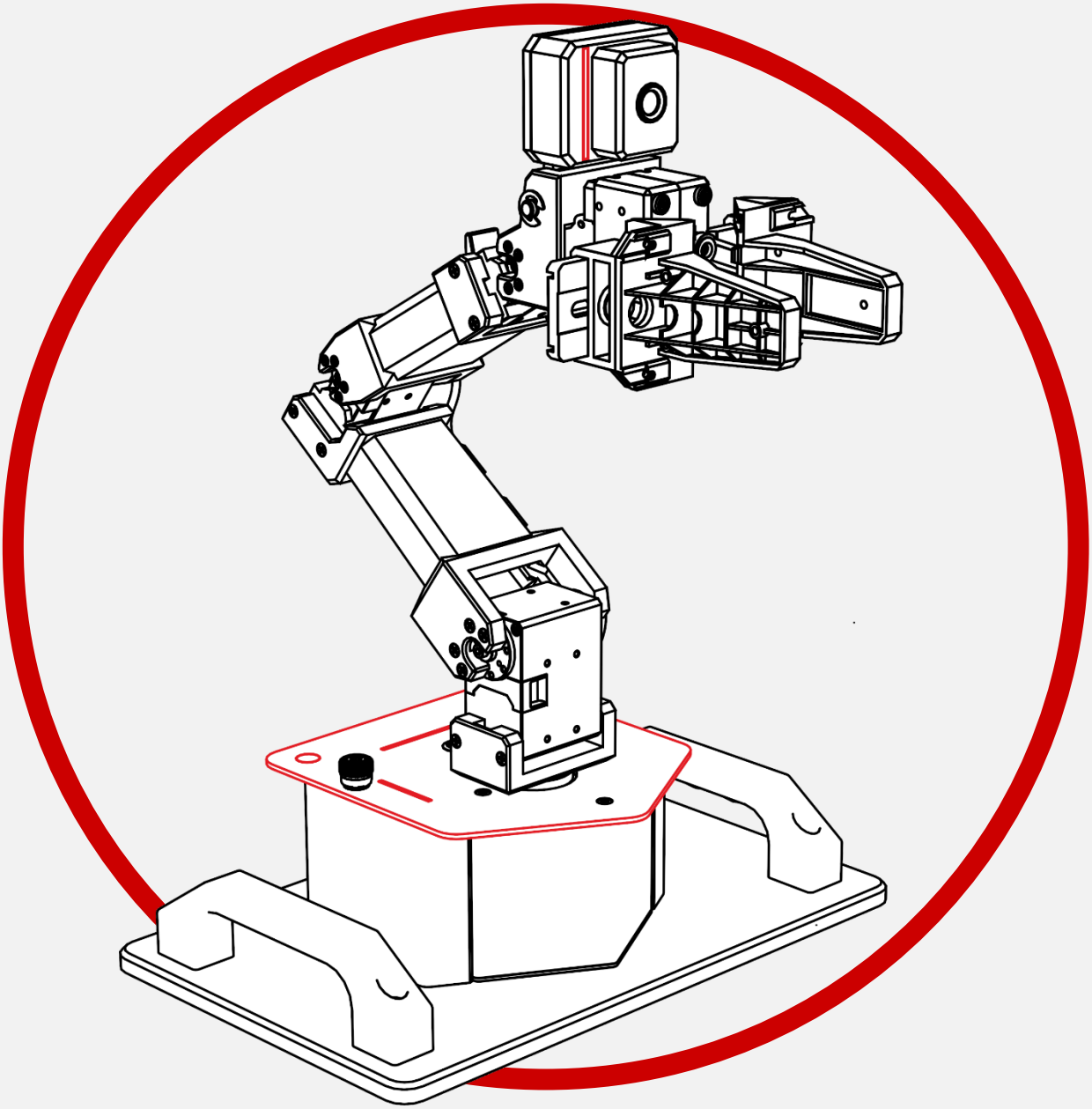

QArm Mini

Visual Servoing

V1 – 13th March 2025

© 2025 Quanser Inc., All rights reserved.

Quanser Inc.
119 Spy Court
Markham, Ontario
L3R 5H6
Canada

info@quanser.com
Phone: 19059403575
Fax: 19059403576
Printed in Markham, Ontario.

For more information on the solutions Quanser Inc. offers, please visit the web site at:
http://www.quanser.com

This document and the software described in it are provided subject to a license agreement. Neither the software nor this document may be used or copied except as specified under the terms of that license agreement. Quanser Inc. grants the following rights: a) The right to reproduce the work, to incorporate the work into one or more collections, and to reproduce the work as incorporated in the collections, b) to create and reproduce adaptations provided reasonable steps are taken to clearly identify the changes that were made to the original work, c) to distribute and publicly perform the work including as incorporated in collections, and d) to distribute and publicly perform adaptations. The above rights may be exercised in all media and formats whether now known or hereafter devised. These rights are granted subject to and limited by the following restrictions: a) You may not exercise any of the rights granted to You in above in any manner that is primarily intended for or directed toward commercial advantage or private monetary compensation, and b) You must keep intact all copyright notices for the Work and provide the name Quanser Inc. for attribution. These restrictions may not be waved without express prior written permission of Quanser Inc.

QArm Mini – Application Guide

Visual Servoing

What is Visual Servoing?

Visual servoing is a control method that uses image-based information to guide the movement of a robotic manipulator. Unlike predefined trajectories or joint-based tasks, visual servoing relies on real-time visual feedback to adjust the robot's position. Building on the image acquisition and object detection concepts from the previous lab, this lab focuses on developing a computer vision pipeline that enables the QArm Mini to detect and track a chosen color.

Background

Prior to starting this lab, please review the following concept reviews (located in Documents/Quanser/4_concept_reviews/),

- Concept Review – Perception → Color Spaces
- Concept Review – Perception → Image Filters
- Concept Review – Robotics → Differential Kinematics

Getting started

This lab integrates image processing with real-time motion control to guide the QArm Mini. This lab extends previous knowledge of image acquisition and object detection, using differential kinematics to convert visual feedback into accurate arm movements. Ensure you have completed the following labs

- Play Lab
- Lab 3: Vision

Before you begin this lab, ensure that the following criteria are met.

- If using a physical QArm Mini, make sure it is securely attached to the base and the manipulator is in the rest position. See the QArm Mini Quick Start Guide for details on this step.
- You are familiar with the basics of Simulink. See the Simulink Onramp for more help with getting started with Simulink.