Lab Procedure for Simulink
Differential Kinematics: Visual Servoing

Setup

1. It is recommended that you review Application Guide – Visual Servoing before starting this lab.
2. Hardware Preparation:
    a. Ensure that the QArm Mini is securely attached to the base.
    b. Verify that the manipulator is in the rest position.
    c. Confirm that the QArm Mini is connected to the PC and turn it ON (the light in the switch should be red).
    d. Check and update the latency setting as shown in Figure 1:
        i. Navigate to Device Manager > Ports
        ii. Select the appropriate device - USB Serial Port (COMx) Make a note of the COM port Number.
        iii. Go to Port Settings > Advanced > Latency
        iv. Set the latency to 2 ms

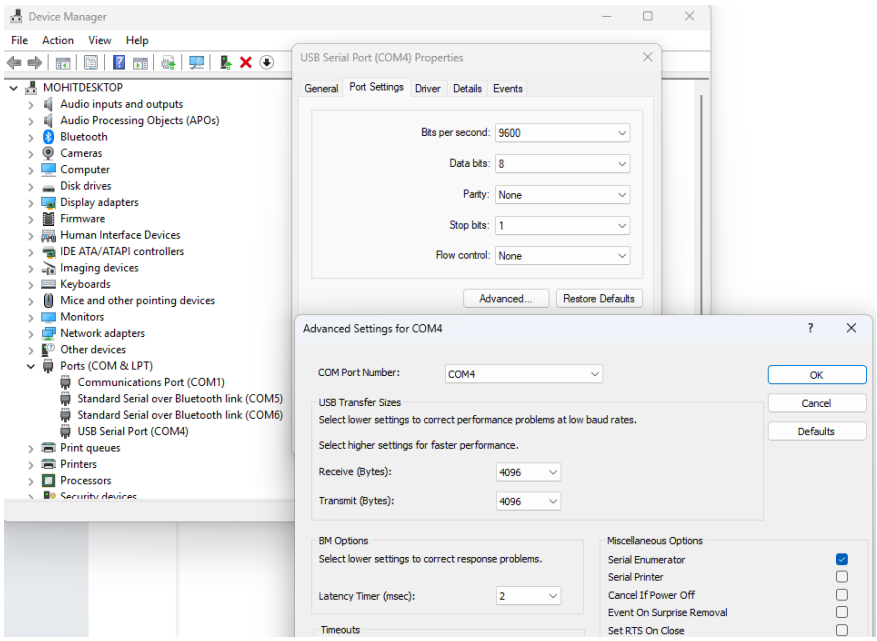

Figure 1. Latency Settings

Visual Servoing

1. Open visual_servoing.slx
    a. In the Hardware tab, open **Hardware Settings -> Solver** and verify:
        i. Solver Type: Fixed
        ii. Solver: ODE2
        iii. Fixed Step Size: 1/30
    b. From the root level's **Application Layer**, double-click QArm Mini subsystem to navigate to the **Interface Layer**, and then the **Hardware Layer**, and double-click on the **HIL Initialize** block.
    c. Update the **Board Identifier** value to match the COM port you noted during setup.
2. In this lab, you will apply concepts from the previous Image Processing lab to identify a colored object and use the QArm Mini to track and follow its movements.
3. Select a solid-colored object (e.g., a blue phone, a green marker, a purple notebook). You will use this for object tracking.
4. Go back to the root level of your model (**Application Layer**). Ensure the switchs in the model matches the positions in Figure 2
    a. Track Object: 0 (off)
    b. All Joints / 2 Joints: Down (2 Joints mode)

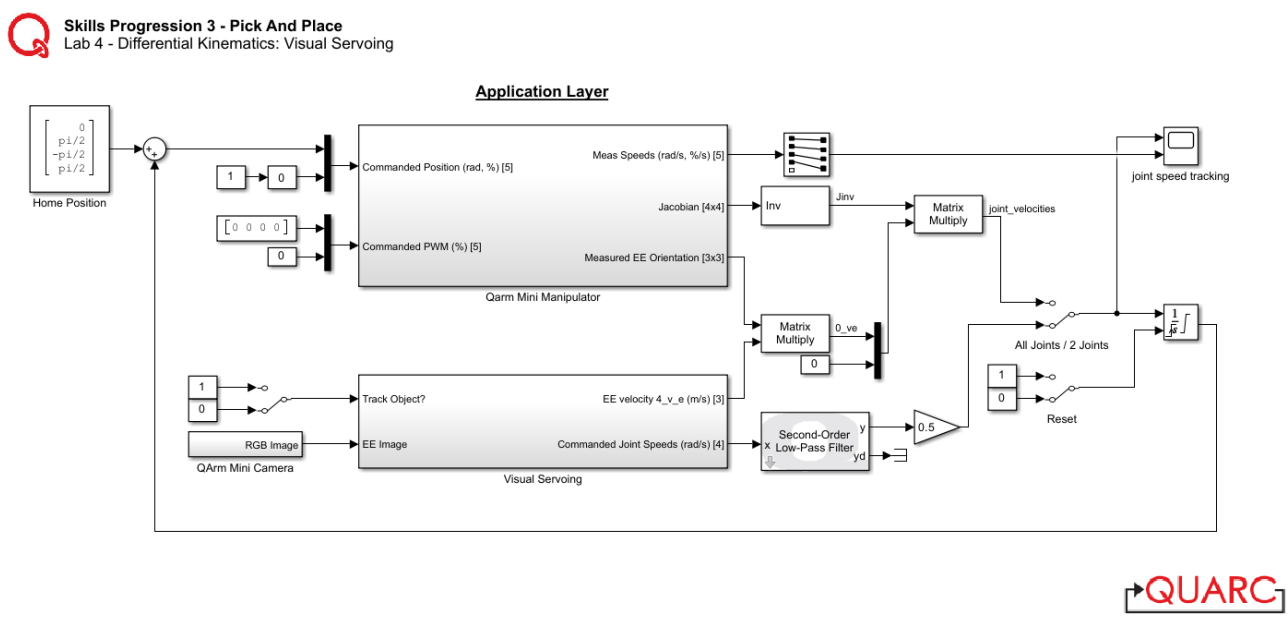

Figure 2. Application Layer

5. Build and deploy the model using the **Monitor and Tune** button.

6. Open the Visual Servoing Subsystem and zoom into the Color thresholding section.

7. Use the Color Select Slider to set the hue value corresponding to the object you want to track.

8. Open the **Image Processing** Video Display to monitor the bitonal (binary) image. Adjust the following parameters to improve tracking accuracy:

    a. Search Window: Defines the region where the system looks for the object.

    b. Min S & V Range: Adjusts the minimum saturation and value (brightness) for object detection.

    c. Max S & V Range: Adjusts the maximum saturation and value. You want your object selection to look like Figure 3.

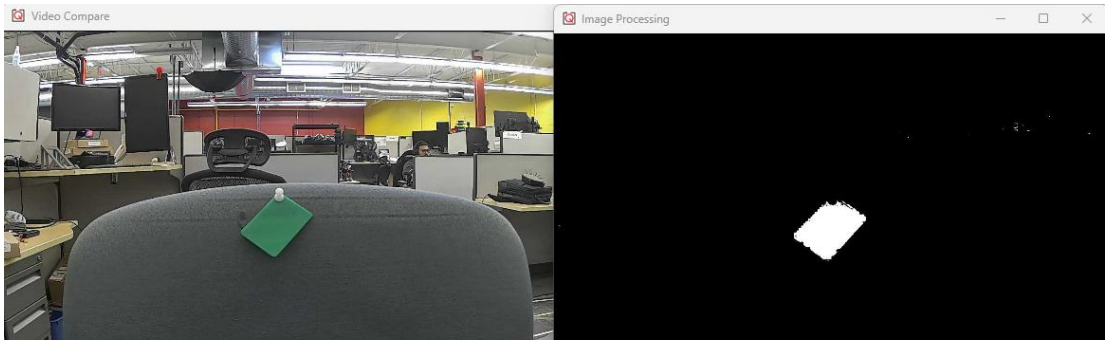

Figure 3. Successfully Tracking a Green Object

9. Once the object is reliably tracked, return to the **Application Layer** and set the Track Object switch to 1 (on). Bring the object into the CSI camera's view. Verify tracking accuracy by observing the Video Compare Display.

10. Slowly move the object in different direction (left, right, up, and down) and observe the manipulator following these movements.

    Note:

    a. At any time, you can stop tracking by setting the Track Object switch to 0

    b. To reset the arm to home position, click the Reset Push button

11. Switch the All Joints / 2 Joints switch up to engage All Joints tracking mode.

12. Observe and compare the manipulator's behavior in All Joints mode versus 2 Joints mode. How does the tracking motion change?

13. Hold the object in a stationary position. How do you expect the manipulator to behave? And is the behaviour as expected?

14. Monitor the joint speed tracking scope as you move the object in front of the camera. What do you observe?

15. Upon completing the experiment, stop and close the model. Turn off the QArm Mini and, gently bring it back to its resting position.