QArm Lab Procedure
Low Level Control

Setup

1. It is recommended that you run this lab individually.
2. Move the QArm manipulator to the home position, and turn ON the unit using the power switch located on the rear side of the base. Once powered, the manipulator should hold this position.
3. This lab is broken into 4 MATLAB models:
    a. Part 1 (LowLevelControlWristPosition.slx)
    b. Part 2 (LowLevelControlPWM.slx)
    c. Part 3 (LowLevelControlCurrent.slx)
    d. Part 4 (LowLevelControlNonLinearEffects.slx)

Exploration

Part 1

1. Open the Simulink model LowLevelControlWristPosition.slx (Figure 1). In this part of the lab you will monitor the position performance of the wrist in the QArm.

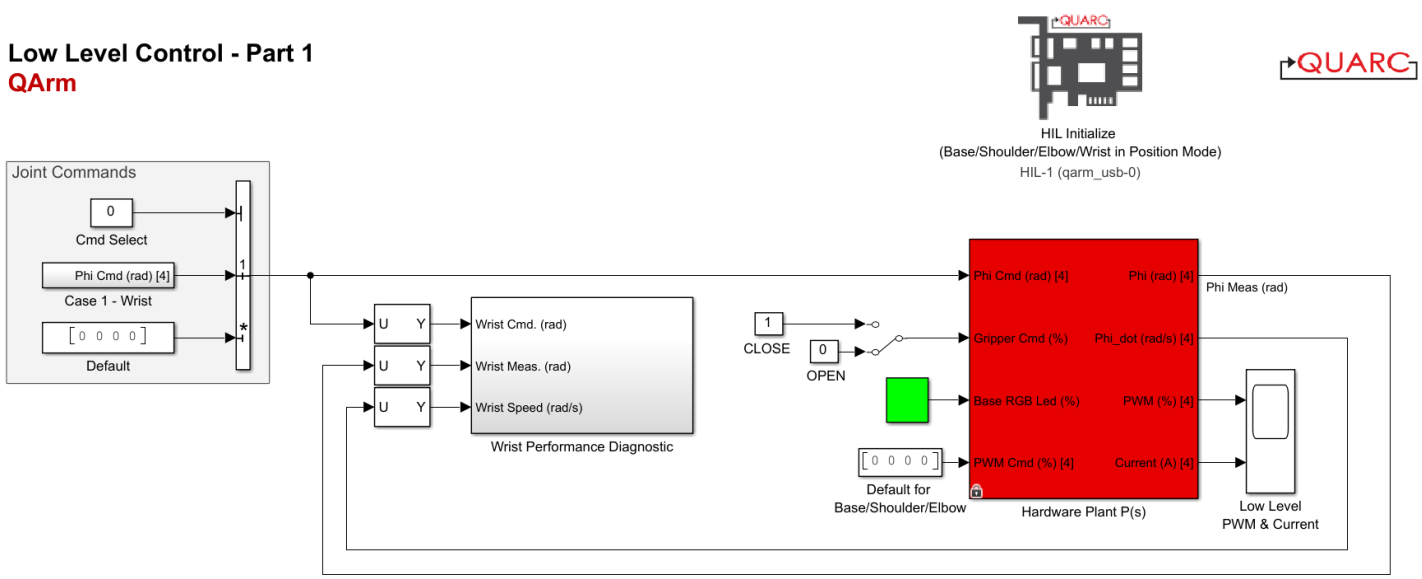

Figure 1: Simulink model that controls the QArm in Position Mode

2. Before making any changes to the model, open the model's Configuration Parameters and verify that they are configured as follows:
    a. Solver type: Fixed-step
    b. Solver: ode4 (Runge-Kutta)
    c. Fixed-step size (fundamental sample time): 500 Hz

3. Build and deploy the model using the Monitor & Tune action. Once started, the model will command 0 rad angles to all four of the manipulator's joints.

4. Set Cmd Select to 1 which will take the QArm wrist above the base joint and pulse +/- 45 degress.

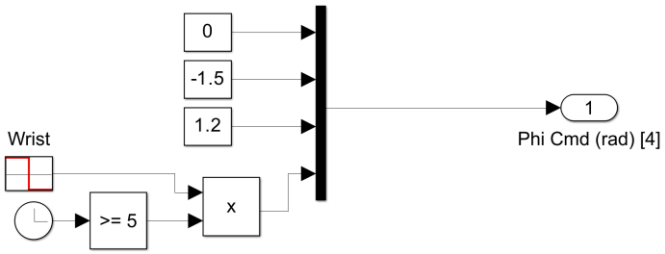

Figure 2: QArm wrist monitoring position,

5. Double click on the sub-system Wrist Performance Diagnostic and double click on Wrist Performance scope.

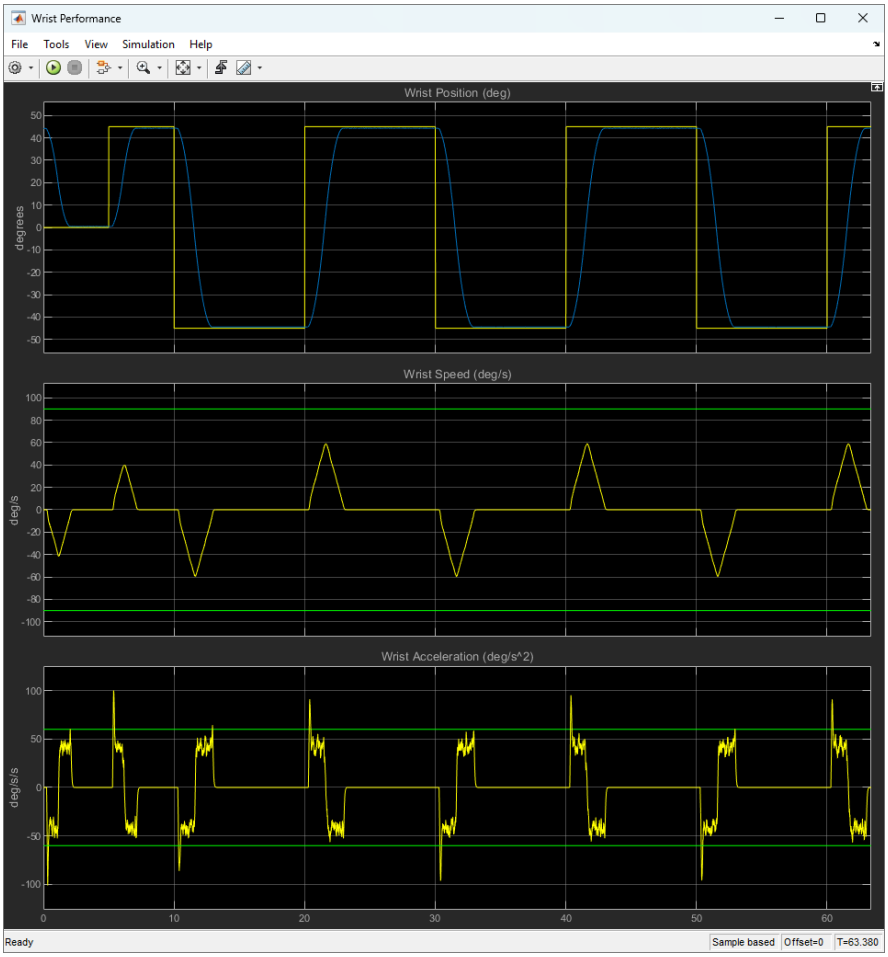

Figure 3: Simulink model that controls the QArm in Position Mode

6. Take a screenshot of the wrist performance while in Position Mode. In Part 2 and Part 3 of the lab procedure the joint performance will be replicated using 2 different control strategies.

7. Close the Wrist Performance scope and set Cmd Select to 0.

8. Press the Stop button to end the experiment, you have reached the end of Part 1.

Part 2.

1. Open the Simulink model LowLevelControlWristPWM.slx (Figure 4). In this part of the lab you will tune the proportional and derivative (PD) terms of the Wrist controller to examine their effect on performance characteristics mentioned in the Concept Review.

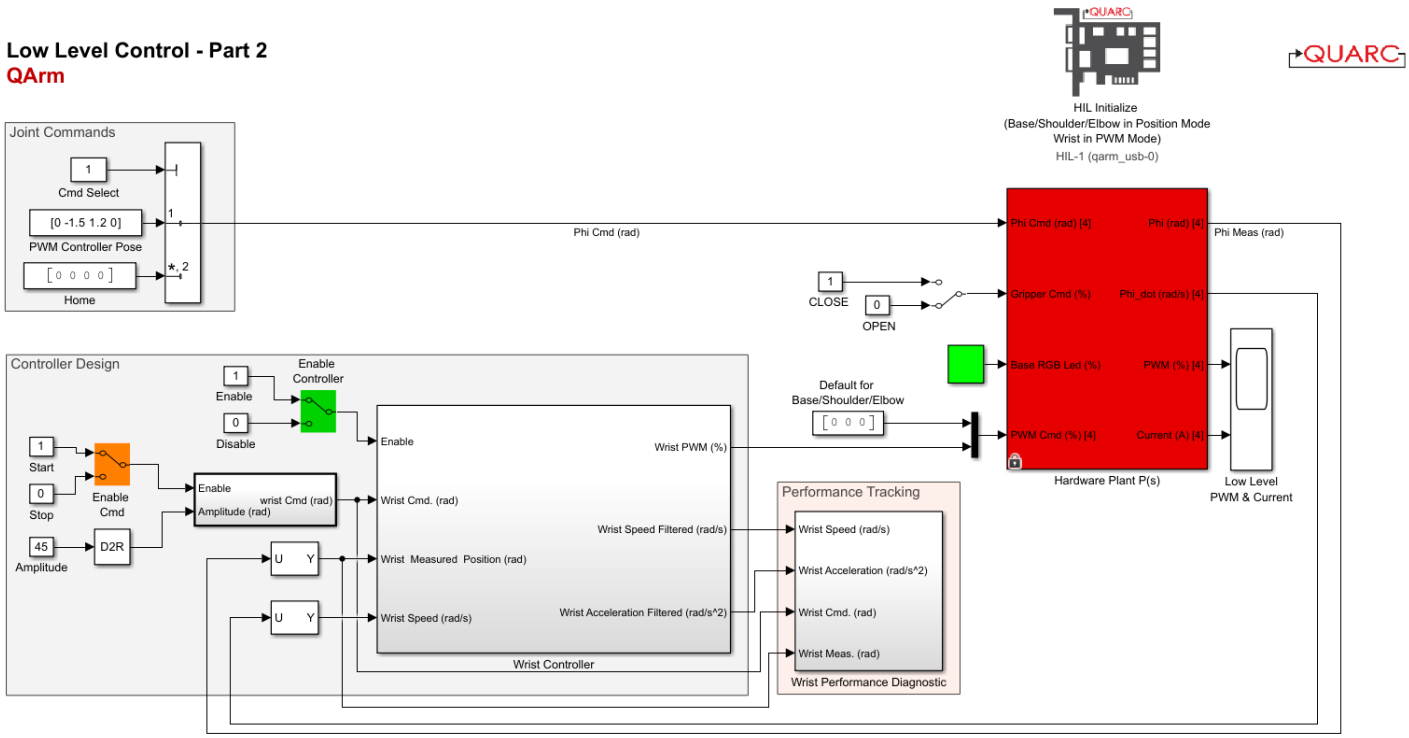

Figure 4: Simulink model that controls the QArm in hybrid Position/PWM Mode.

2. Double click on the sub-system Wrist Controller.

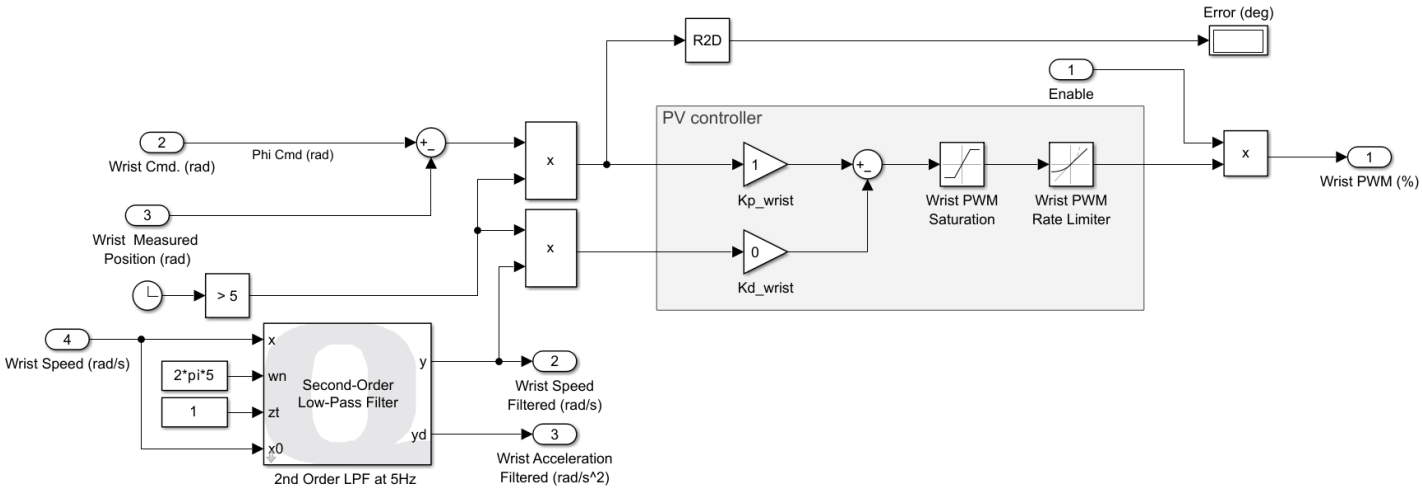

Figure 5: Simulink subsystem with the Wrist PD PWM controller.

3. Before making any changes to the model, open the model's Configuration Parameters and verify that they are configured as follows:

   a. Solver type: Fixed-step

b. Solver: ode4 (Runge-Kutta)

c. Fixed-step size (fundamental sample time): 500 Hz

4. Build and deploy the model using the Monitor & Tune action. Once started, the model will command 0 rad angles to all four of the manipulator's joints.

5. Set Cmd Select to 1 to move the QArm to the same wrist controller position as in Part 1 of the lab.

6. Double click the green Enable Controller manual switch to enable the PD controller for the wist.

7. Double click the orange Enable Cmd switch to send a +/- 45 degree square wave to the wrist controller.

8. At first glance, it may seem that the measured position tracks the desired quite well, and that the controller is doing a very good job. For safety, the maximum joint speeds for the base, shoulder, and elbow are set to ±90 deg/s and the maximum joint acceleration is set to ±60 deg/s^2. Take a look at the Wrist Performance scope. Do the speed and acceleration of the wrist meet the safety limit? What action can you take to ensure that these conditions are met without changing the controller gains?

9. Double click on the Wrist PWM Saturation block, adjust the upper and lower limit to bring joint speed under 90 deg/s. Does the wrist joint acceleration get affected by this saturation? Why or Why not?

10. Double click on the Wrist PWM Rate Limiter block, adjust the rising and falling slew rate to bring joint acceleration under 60 deg/s^2.

11. Now you see that the wrist joint is performing under the safety limit. However, the joint performance becomes sluggish comparing to the position command. You will now tune the controller.

12. Tune the controller by modifying Kp and Kd to get
    a. a. Overshoot under 2 degrees on either side,
    b. b. Steady-state error less than 1 degree.
    c. Settling time under 3 seconds.

    The final performance should be similar to the one shown in Figure 6.

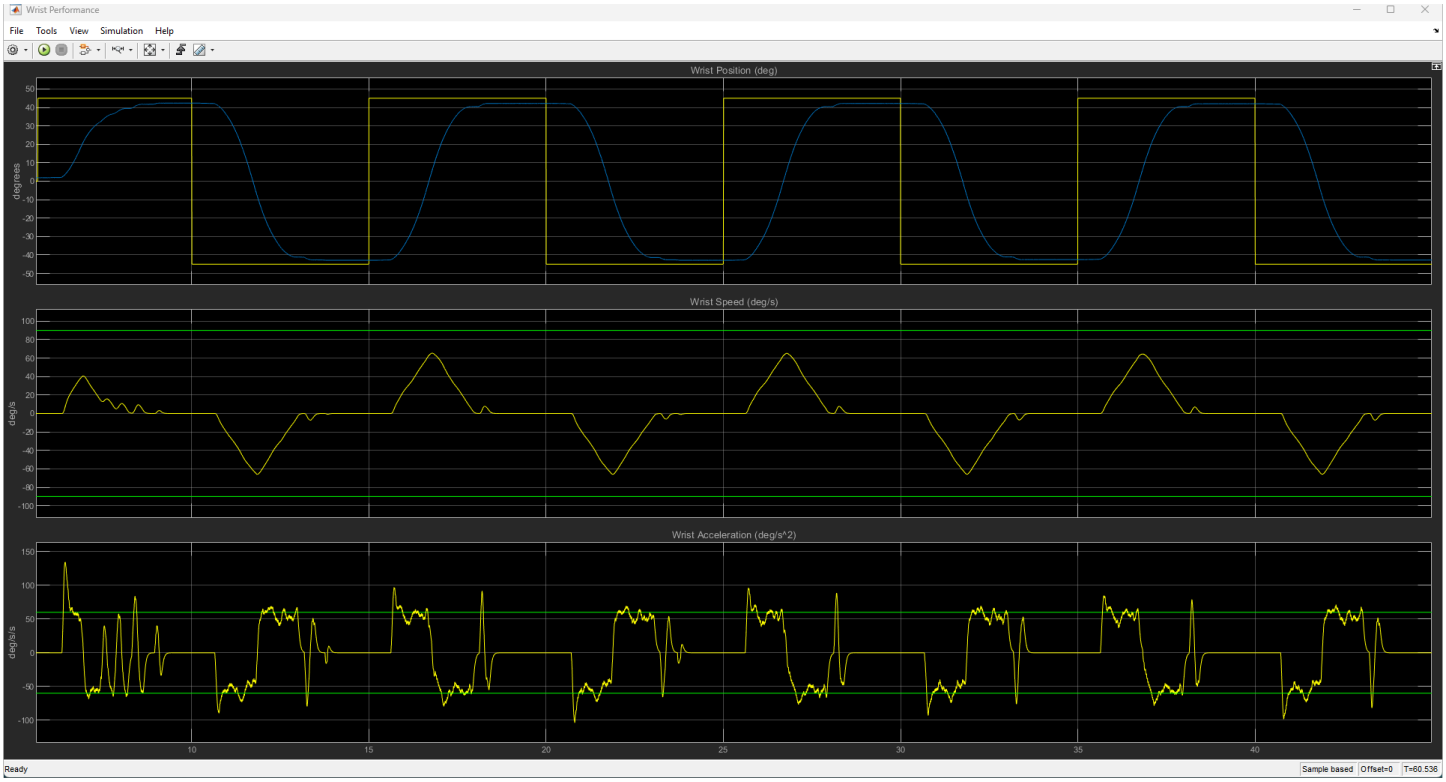

Figure 6: Example performances you should see after you satisfy all the requirements

13. Close the Wrist Performance scope and set Cmd Select to 0.

14. Press the Stop button to end the experiment, you have reached the end of Part 2.

Part 3

1. Before starting Part 3 let's look at the QArm's wrist motion. Turn off the power switch for the QArm.
    a. Manually rotate the QArm wrist -45 degrees:

Figure 7: QArm wrist rotated -45 degrees.

Does the wrist rotate back to 0 degrees or does it stay at -45 degrees?

b. Manually rotate the QArm wrist +45 degrees:

Figure 8: QArm wrist rotated +45 degrees.

Does the wrist rotate back to equilibrium or does it stay at +45 degrees?

2. Make a note of which range of motion made the arm return close to 0 degrees.

3. Ensure the wrist rotation is close to 0 degrees and power on the QArm.

4. Open the Simulink model LowLevelControlWristCurrent.slx (Figure 9). In this part of the lab, you will study the performance of the wrist current controller. Primarily you will focus on increasing the amplitude of the wrist angle to study how the controller performs as the range of motion for the wirst increases.

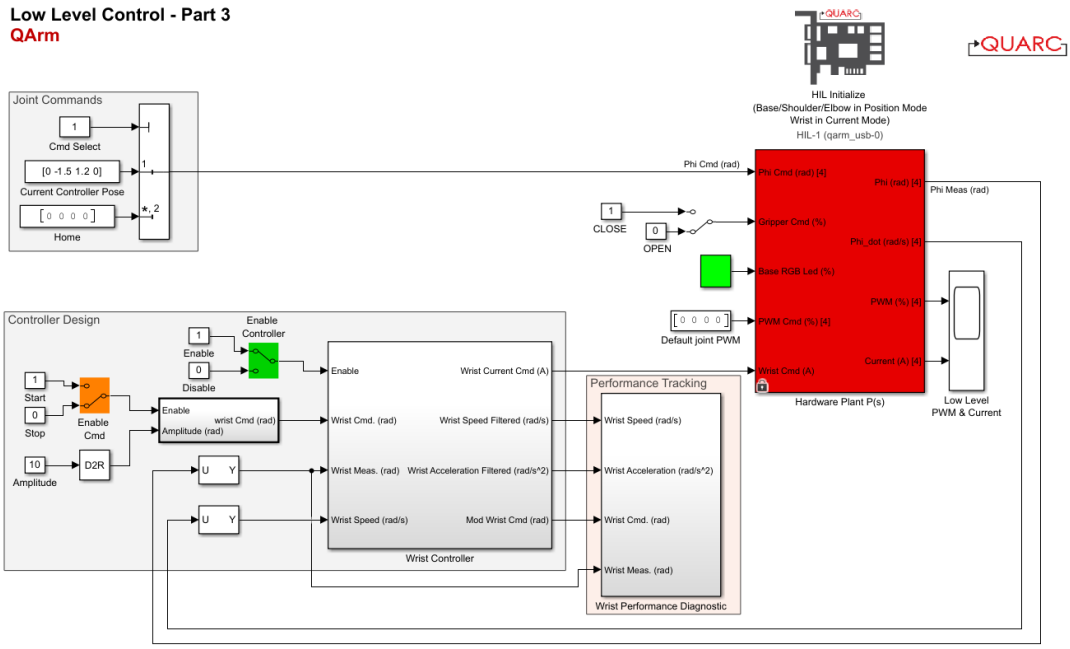

Figure 9: Simulink model that controls the QArm in hybrid Position/Current Mode

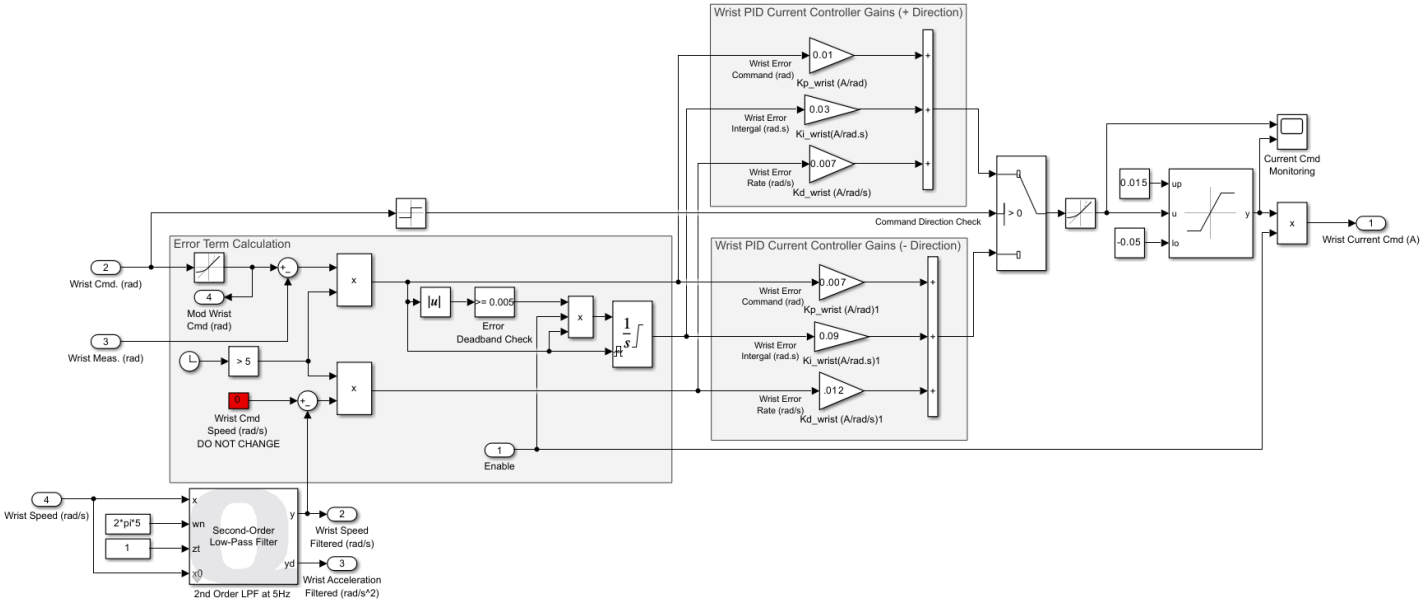

Figure 10: Simulink subsystem PID wrist current controller

5. Before making any changes to the model, open the model's Configuration Parameters and verify that they are configured as follows:

    a. Solver type: Fixed-step

    b. Solver: ode4 (Runge-Kutta)

    c. Fixed-step size (fundamental sample time): 500 Hz

6. Build and deploy the model using the Monitor & Tune action. Once started, the model will command 0 rad angles to all four of the manipulator's joints.

7. Set Cmd Select to 1 to move the QArm to the same wrist controller position as in Part 1 of the lab.

8. Double click the green Enable Controller manual switch to enable the PID controller for the wist.

9. Double click the orange Enable Cmd switch to send a +/- 10 degree square wave to the wrist controller.

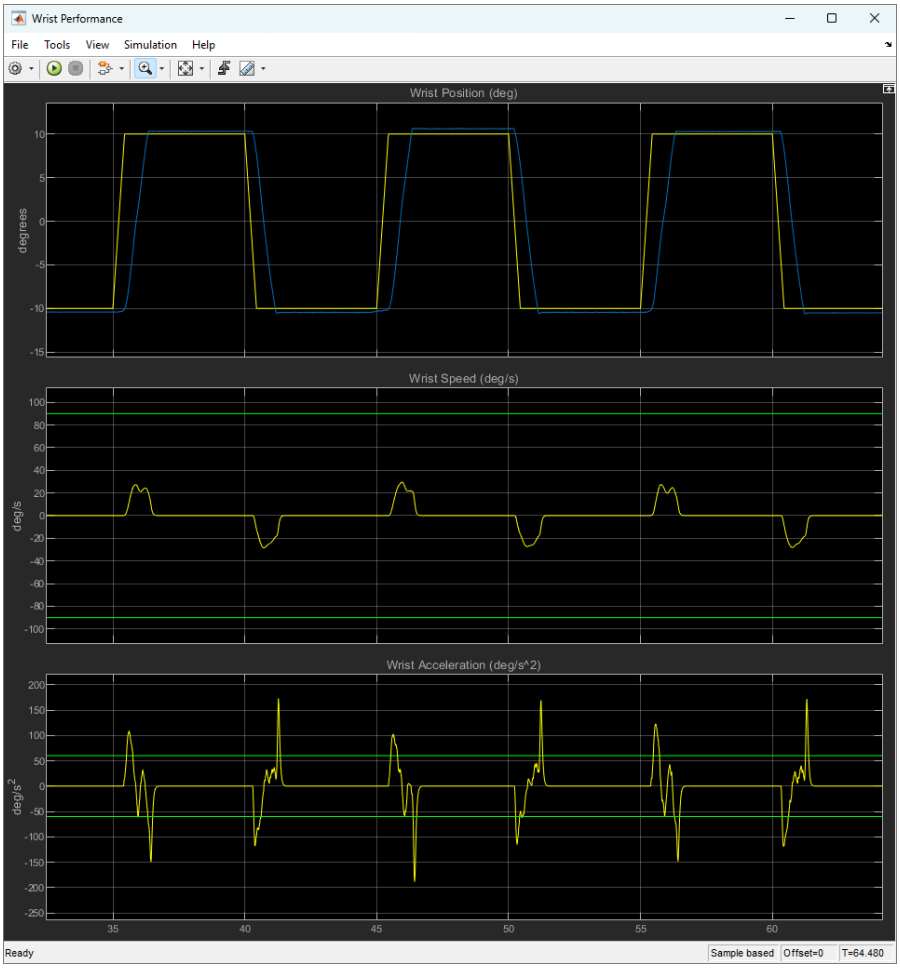

Figure 9: Wrist current controller response, amplitude +/- 10 degrees

10. Open the Low Level PWM & Current plot to monitor the PWM and current measurements of the QArm. Make a note of the shape of the PWM and current measurements.

11. Double click on the Amplitude constant and progressively increase the value from +/- 10 degrees to +/- 40 degrees using 10 degree increments.

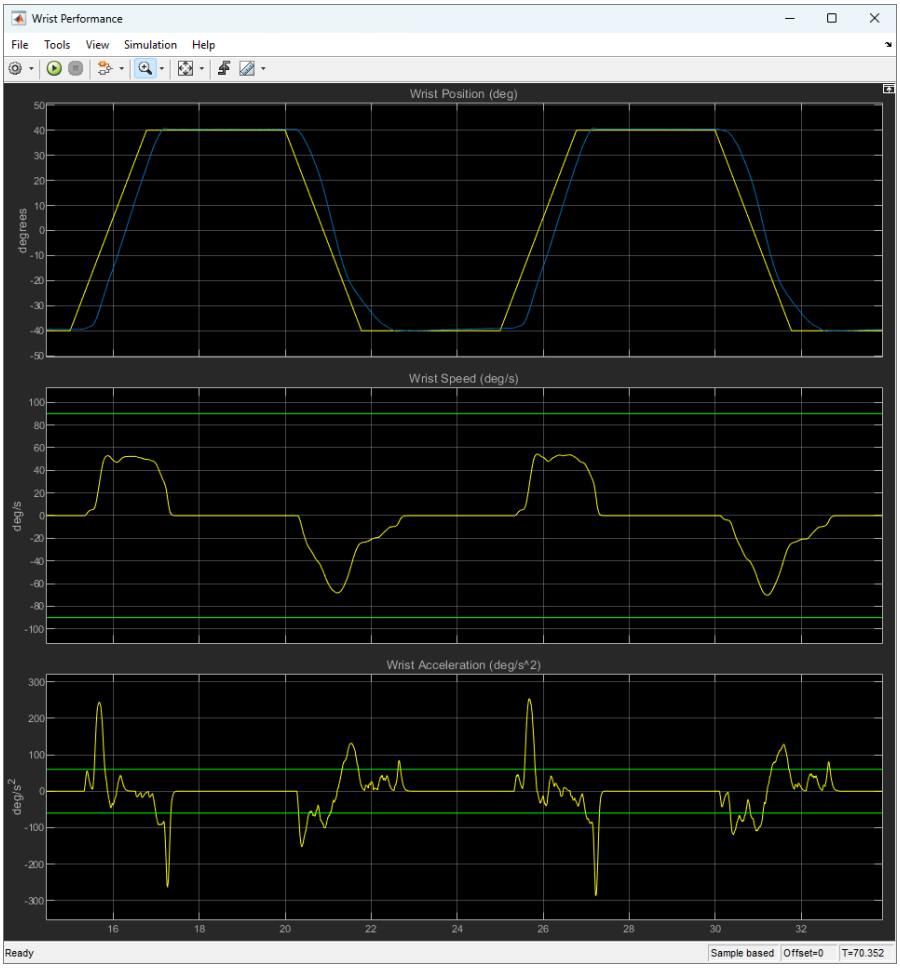

Figure 10: Wrist current controller response, amplitude +/- 40 degrees

12. Once again make a note of the PWM and current measurements.

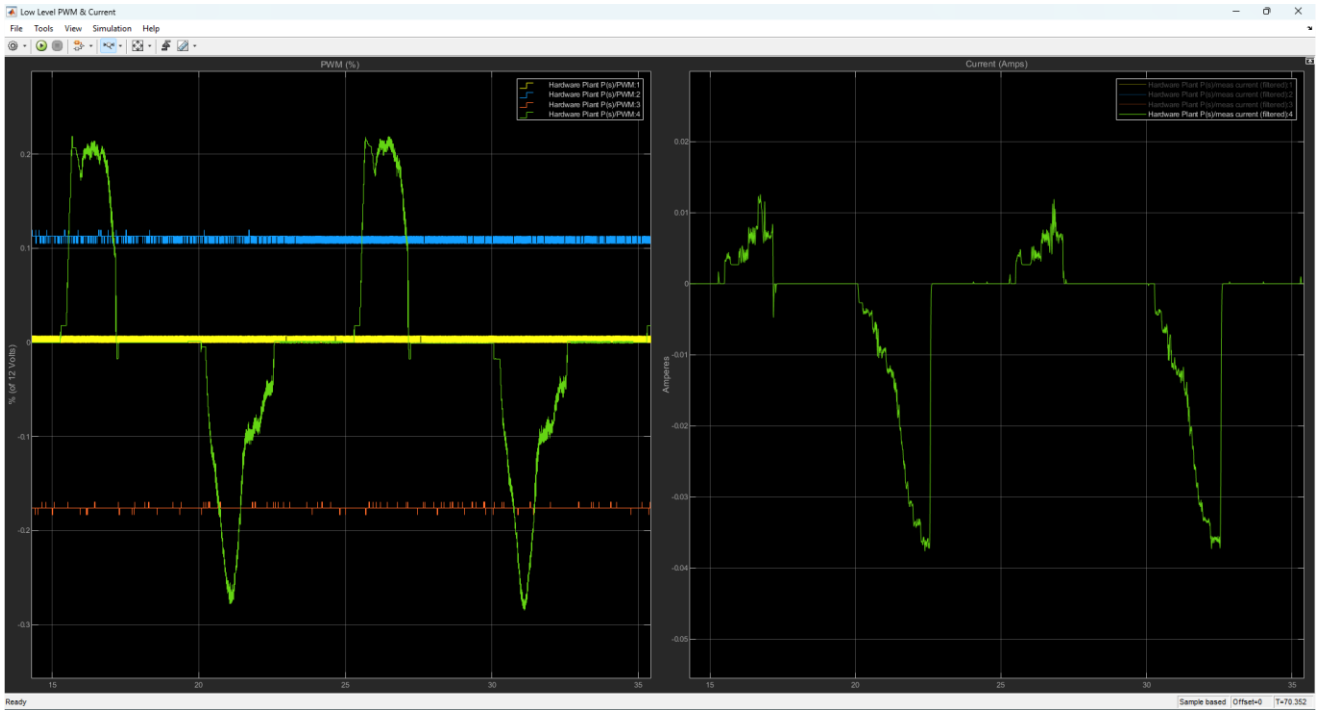

Figure 12: Wrist PWM and current measurements, amplitude +/- 40 degrees

13. How does the shape of the PWM and current measurements change as the amplitude increases? Do you expect the shape to be symmetrical? Why or why not?

14. Do you consider PID control to be adequate for current based control for a manipulator wrist? Why or why not?

15. Double click the orange Enable Cmd switch back to 0 to stop the square wave command.

16. Set the Cmd Select to 0, which makes the arm go back to the Home position.

17. Press the Stop button to end the experiment. You have reached the end of Part 3.

Part 4

1. Open the Simulink model LowLevelControlNonLinearEffects.slx (Figure 13). In this part of the lab, you will study the cross coupling effects of the QArm joints when the position command is close to the unique cases mentioned in the Concept Review.

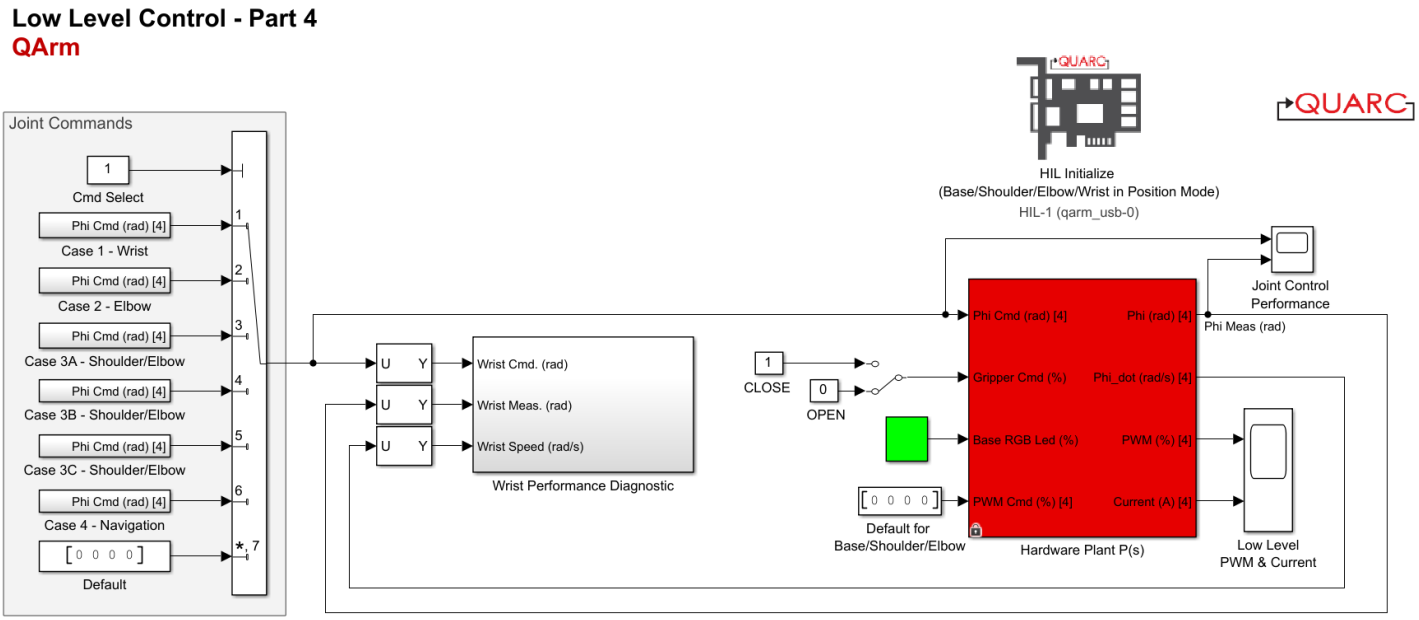

Figure 13: Simulink model for QArm in position mode

2. Set Cmd Select to 3 and the elbow should go to -90 degrees. The arm is fully stretched out and the shoulder oscillates between ±30 degrees with a 10 second period. Noted that the motion of the shoulder is symmetric about the vertical axis and the response of the shoulder in the scope is symmetric at the extremes (+/- 30 degrees). At each extreme, does the shoulder joint overshoot or undershoot? Why?

3. Set Cmd Select to 4. The arm is still fully stretched out but now the shoulder oscillates between 15 and 75 degrees with a 10 second period. Is the response of the shoulder in the scope is symmetric at the extremes (+15 and +75 degrees)? Why or why not? Take notes.

4. Set Cmd Select to 5. The elbow is set at 0-degree. The arm is now bent and the shoulder oscillates between ±30 degrees with a 10 second period. In this case, the motion of the shoulder is symmetric about the vertical axis. Is the motion of the shoulder joint symmetric at the extremes? Why or why not? Take notes.

5. Set Cmd Select to 0 so the arm goes home.

6. Close the gripper by clicking on the Manual Switch. Set Cmd Select to 6. The arm navigates between 2 positions close to the table. Which joints are changing when the end-effector is moving between two points? What is the shape of the trajectory that the end-effector is following? How woud you make the end-effector move along a linear path between two points?

7. Set the Cmd Select to 0, which makes the arm go back to the Home position.

8. Press the Stop button to end the experiment.

9. With all models stopped, hold the arm, turn OFF the manipulator using the power switch at the rear end of the base unit and gently move it to the rest position