QUANSER
INNOVATE · EDUCATE

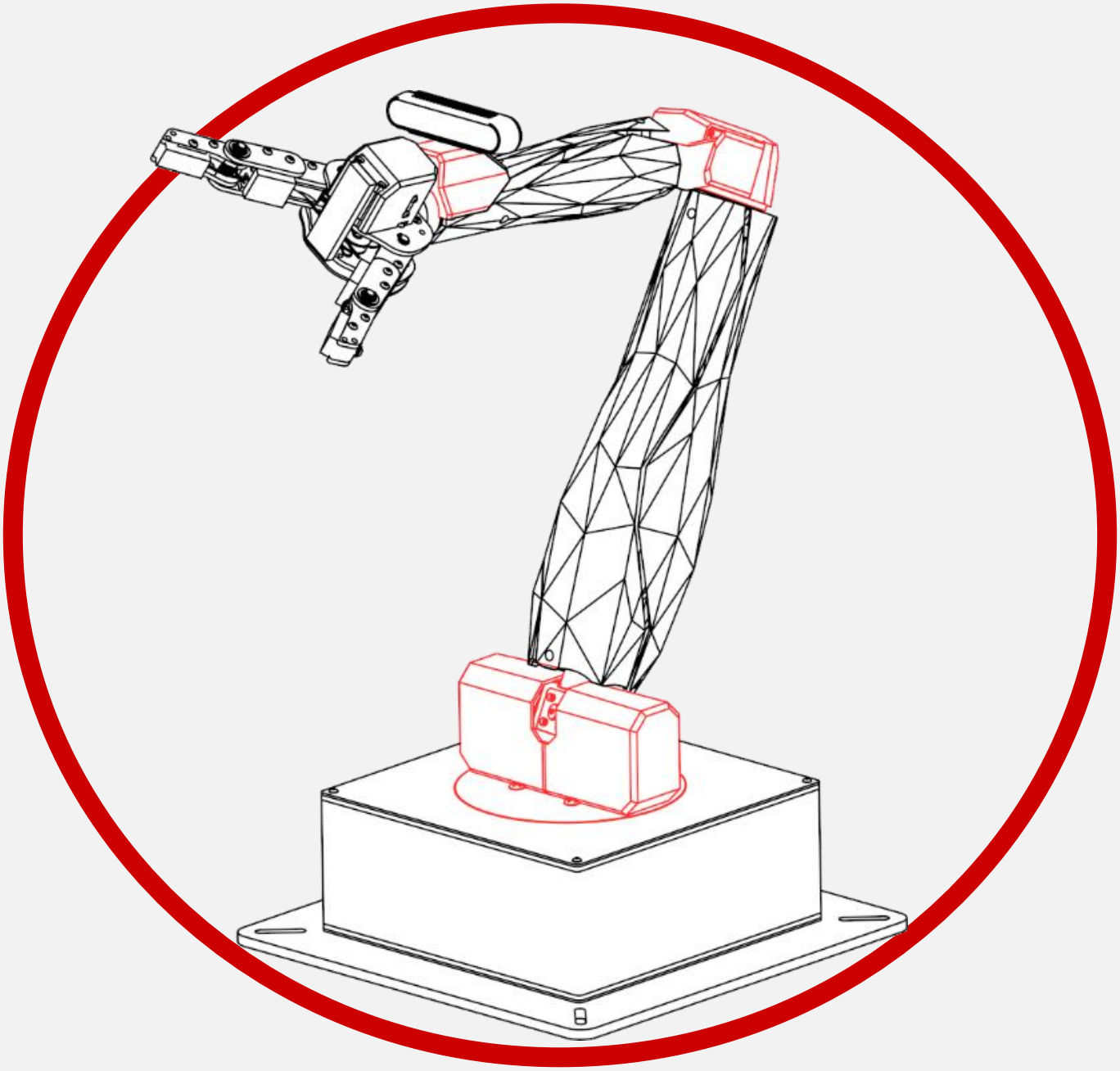

QArm

Workspace Identification

V1.0 – 13th February 2025

© 2025 Quanser Consulting Inc., All rights reserved.
For more information on the solutions Quanser offers,
please visit the web site at: http://www.quanser.com

Quanser Consulting Inc.
119 Spy Court
Markham, Ontario
L3R 5H6, Canada

info@quanser.com
Phone : 19059403575
Fax : 19059403576
printed in Markham, Ontario.

This document and the software described in it are provided subject to a license agreement. Neither the software nor this document may be used or copied except as specified under the terms of that license agreement. Quanser Consulting Inc. ("Quanser") grants the following rights: a) The right to reproduce the work, to incorporate the work into one or more collections, and to reproduce the work as incorporated in the collections, b) to create and reproduce adaptations provided reasonable steps are taken to clearly identify the changes that were made to the original work, c) to distribute and publicly perform the work including as incorporated in collections, and d) to distribute and publicly perform adaptations. The above rights may be exercised in all media and formats whether now known or hereafter devised. These rights are granted subject to and limited by the following restrictions: a) You may not exercise any of the rights granted to You in above in any manner that is primarily intended for or directed toward commercial advantage or private monetary compensation, and b) You must keep intact all copyright notices for the Work and provide the name Quanser for attribution. These restrictions may not be waved without express prior written permission of Quanser.

Caution

This equipment is designed to be used for educational and research purposes and is not intended for use by the public. The user is responsible for ensuring that the equipment will be used by technically qualified personnel only. Users are responsible for certifying any modifications or additions they make to the default configuration.

QArm – Application Guide

Workspace Identification

Why explore Workspace Identification?

Kinematics refers to the geometric and time-based properties of the motion of an object without considering the forces and moments that cause the motion. In this lab, we will study this relationship in the context of position and orientation of manipulator linkages and end-effector with respect to joint angles in static situations. This aspect of kinematics is called forward position kinematics.

In order to analyze geometrically complex manipulators, coordinate frames are attached to various parts of the manipulator including the base frame of the robot which is a fixed coordinate frame, and the end-effector frame of the robotic arm which is attached to the robot end-effector. The study of manipulator kinematics describes how the location and orientation of these frames vary in different configurations, based on the joint angles of the robot arms. The set of all obtainable positions and orientations form the workspace of the manipulator.

In this lab, you will complete the forward kinematics formulation and use it to map the workspace of the QArm manipulator. The forward kinematics function you complete here will be carried forward with you throughout all the future lab activities.

Background

The QArm content contains 5 labs that focus on kinematic manipulation. The first one focuses on learning how to do low level control, workspace identification, lead through control, teach pendant and trajectory generation. This lab focuses on how workspace identification is performed for a robotic manipulator.

Prior to starting this lab, please review the following concept reviews (should be located in Documents/Quanser/4_concept_reviews/),

- Concept Review – Robotics/Frames of Reference
- Concept Review – Robotics/Denavit Hartenberg Framework

Getting started

The goal of this lab is to study what the operating manifold is for a robotic manipulator . A lab procedure will guide on how to setup the forward kinematics for the QArm and how the workspace manifold is identified.

Before you begin this lab, ensure that the following criteria are met.

- The QArm has been setup and tested. See the QArm Quick Start Guide for details on this step.
- You are familiar with the basics of Simulink. See the Simulink Onramp for more help with getting started with Simulink.

Standard DH Parameters for QArm

The standard Denavit Hartenberg (DH) convention (from *Robot Dynamics and Control* by *M. W. Spong* and *M. Vidyasagar*) will be used to assign joint frames $\{0\}$ to $\{4\}$ and find the homogenous transformations between the frames.

Starting with the schematic in Figure 1, and the parameter definitions in Table 1.1, you can create a table of link parameters $a_i, \alpha_i, d_i, \theta_i$ for $i = 1,2,3,4$. Note that for 4-DOF, we have $L_1 = 0.14m$, $L_2 = 0.35m$, $L_3 = 0.05m$, $L_4 = 0.25m$, and $L_5 = 0.15m$.

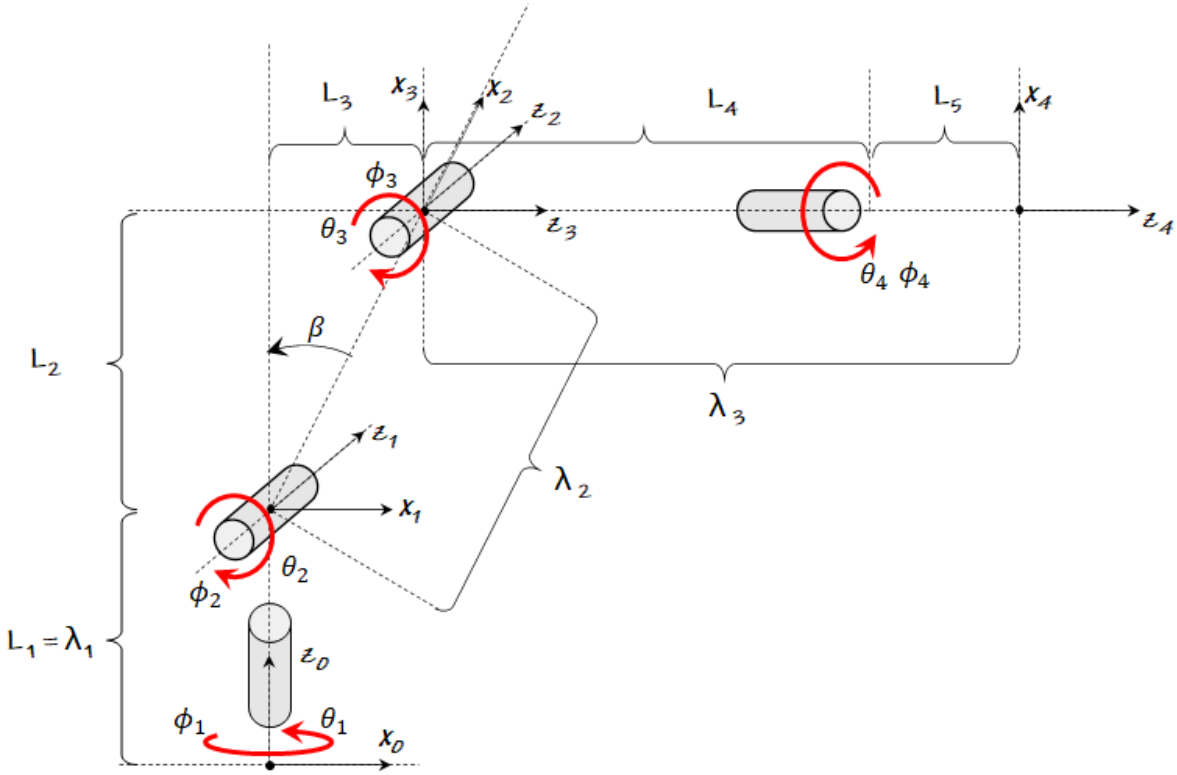

Figure 1 Frame diagram for the Quanser Arm manipulator

	Name	Measured		About / Along
		From	To	
a_i	link length	z_{i-1}	z_i	x_i
α_i	twist angle	z_{i-1}	z_i	x_i
d_i	link off-set	x_{i-1}	x_i	z_{i-1}
θ_i	joint angle	x_{i-1}	x_i	z_{i-1}

Table 1: Summary of link parameters

Note that the manipulator shown in Figure 1 represents its home position, at which, the DH joint angle vector is given by,

$$\overrightarrow{\Theta} = \begin{bmatrix} \theta_1 \\ \theta_2 \\ \theta_3 \\ \theta_4 \end{bmatrix} = \begin{bmatrix} 0 \\ \beta - \frac{\pi}{2} \\ -\beta \\ 0 \end{bmatrix} \tag{2}$$

The manipulator's encoders and actuators though are calibrated at this position. Thus, an actuator position command of $[0\ 0\ 0\ 0]^T$ would move the manipulator to the home position, where it's encoders would read a joint position of $[0\ 0\ 0\ 0]^T$ as well. This represents the physical manipulator joint space $\overrightarrow{\Phi}$. The mapping between these is summarized in Table 1.2 describes the manipulator in $\overrightarrow{\phi}$ space, while we carry out the mathematics in $\overrightarrow{\theta}$ space without having to carry around the offset in equation 2. For example, a command of $\phi_2 = 0$ will imply $\theta_2 = \beta - \frac{\pi}{2}$ which corresponds to joint 2 in the home position. Similarly, the lengths L_2, L_3, L_4 and L_5 directly are irrelevant to the mathematics as you will realize in the lab procedure. These length transforms are also summarized in Table 2.

New parameter	Original Parameter
λ_1	L_1
$\boldsymbol{\lambda_2}$	$\boldsymbol{\sqrt{{L_2}^2 + {L_3}^2}}$
$\boldsymbol{\lambda_3}$	$\boldsymbol{L_4 + L_5}$
$\boldsymbol{\beta}$	$\boldsymbol{\tan^{-1}\left({L_3}/{L_2}\right)}$

New parameter	Original Parameter
$\boldsymbol{\phi_1}$	$\boldsymbol{\theta_1}$
$\boldsymbol{\phi_2}$	$\boldsymbol{\theta_2 + \frac{\pi}{2} - \beta}$
$\boldsymbol{\phi_3}$	$\boldsymbol{\theta_3 + \beta}$
$\boldsymbol{\phi_4}$	$\boldsymbol{\theta_4}$

Table 2. Linear mapping to simplify the mathematical formulations

Workspace Identification and Validation

Figure 2 visually outlines the boundary of the reachable workspace of the QArm manipulator. The red trajectory is the path followed by the end-effector in task space, and measuring it requires the forward kinematics formulation. In Figure 2a, a side view of the manipulator shows the reach of the end-effector in a vertical plane as the shoulder and elbow reach their joint limits as well as limits related to surface boundaries (such as a tabletop). Figure 2b shows a top-down view of the manipulator's horizontal planar limits as the base joint moves between its joint limits.

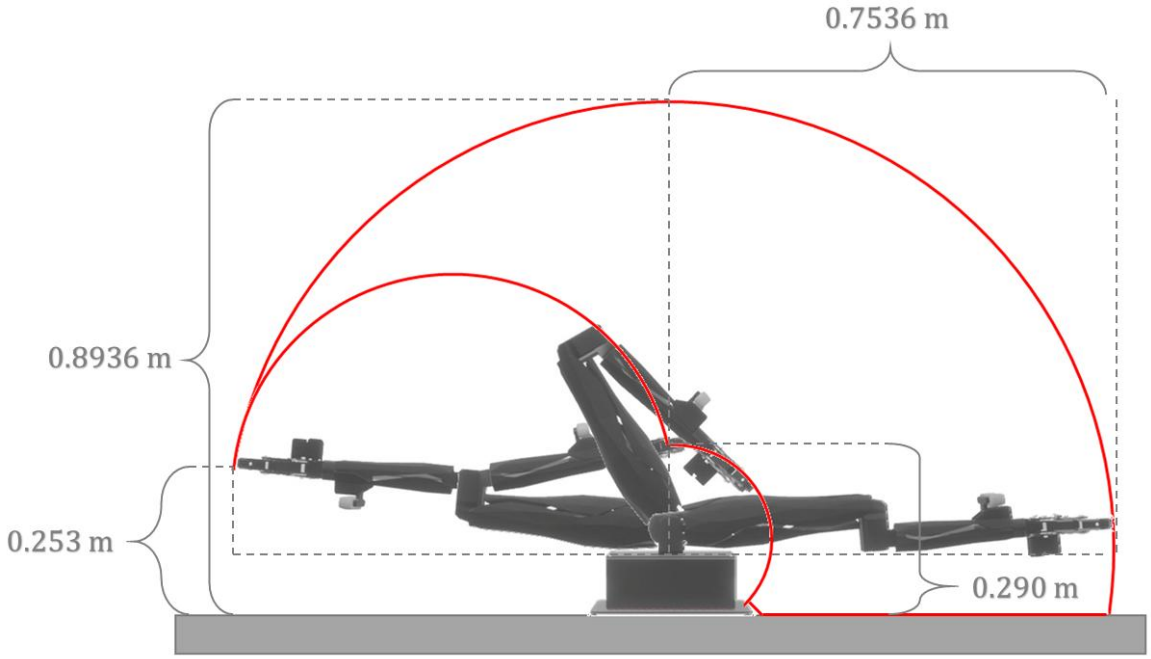

a. side view

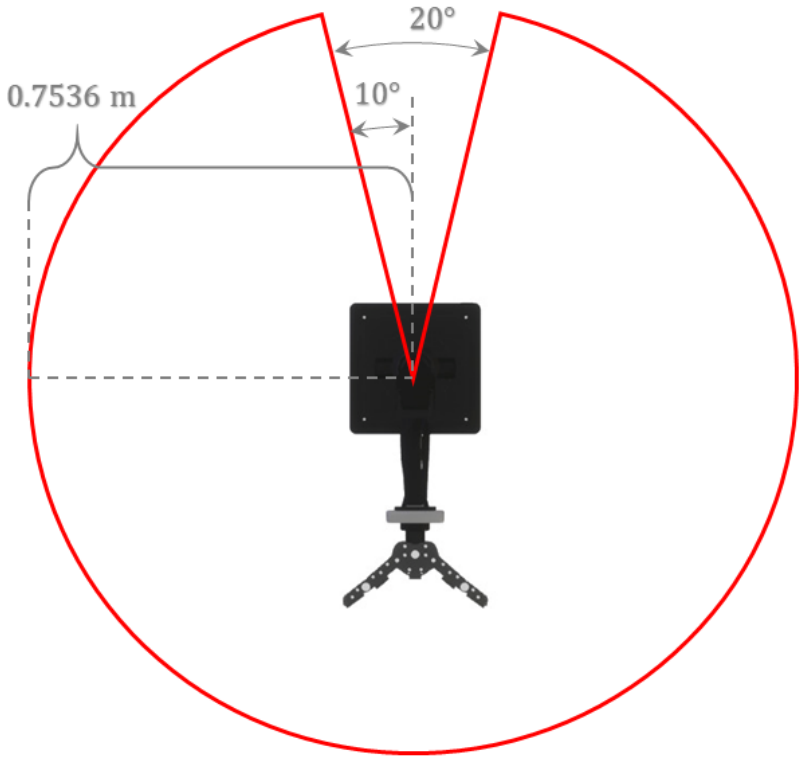

b. top view

Figure 2. The reachable workspace of the QArm manipulator