QArm Lab Procedure
Singularity Avoidance

Setup

1. It is recommended that you run this lab individually.
2. Move the QArm manipulator to the home position and turn ON the unit using the power switch located on the rear side of the base. Once powered, the manipulator should hold this position.
3. Launch MATLAB and browse to the working directory for Lab 8 – Singularity Avoidance.

Singularity Avoidance

1. Open the Simulink model SingularityAvoidance.slx (Figure 1).
2. Replace the cubic spline, forward kinematic and inverse kinematics, and differential kinematic MATLAB functions in the Simulink model with the same functions that you developed in the previous labs.

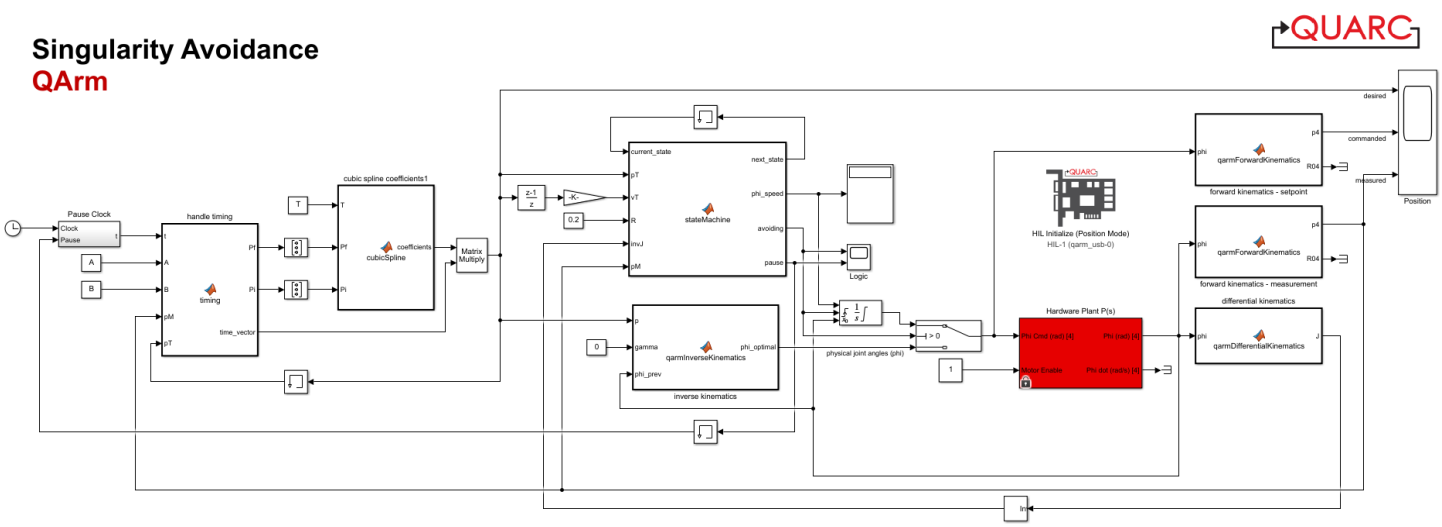

Figure 1 - Simulink model that implements a singularity avoidance algorithm using a finite state machine

3. Open the stateMachine MATLAB function. Using the Concept Review as a guide, complete the script to implement the finite state machine shown in Figure 3. You are required to complete the State Transition and State Action sections for states 1, 2, 3, and 4, namely assuming the appropriate values to the following variables: `next_state`, `phi_speed`, and `avoiding`. Recall that the state machine will determine if the target position (pT) falls within the singularity avoidance region; if it does an alternative trajectory along the surface of the singularity avoidance cylinder is commanded to the end-effector otherwise the original cubic spline trajectory (P) is commanded. In the function, by setting the variable `avoiding` to 1, you will force the end effector to follow the perimeter of the avoidance region, otherwise setting it to 0 commands the linear trajectory.
4. Once you have completed the state machine, open Model Properties and select the Callbacks tab. Under InitFcn, set A to $[0;\ 0.45;\ 0.3]$ and B to $[\ 0;\ -0.45;\ 0.3]$. Comment all other A and B values using the % symbol. This will command a spline trajectory with endpoints A and B along the Y axis. This

trajectory passes through the point $[0;\ 0;\ 0.3]$, which is a singular point. What do you think will happen as the arm approaches the singularity?

5. Back in the Simulink model, set the radius of the singularity avoidance cylinder by setting the constant wired to the input port of the stateMachine script labeled R to a value of 0.25 m.

6. Build and deploy the model using the Monitor & Tune action button under the Hardware Tab of your model.

7. Why does the manipulator seem to jump discontinuously when exiting the avoidance volume? Stop the model, open the state machine and uncomment lines 51 to 53, which pause the linear trajectory generator if it has arrived at the exit point while the physical manipulator hasn't. Deploy the model and comment on the difference.

8. When the model runs, the end-effector will initially move towards the first point. Then at each sample time the state machine will determine if the end-effector should follow the original commanded spline trajectory towards the other endpoint or follow the alternative trajectory along the surface of the singularity avoidance cylinder. Take a moment to observe the desired, commanded, and measured trajectories along the X, Y, and Z axes.

9. Stop the model.

10. Once again open Model Properties and select the Callbacks tab. Under InitFcn select the second set of A and B points and repeat the previous step. What is different between this set of points and the previous? Make note of your observations and take necessary screenshots of your results.

11. Repeat the previous step with the third set of A and B points. What is different between this set of points and the first? Make note of your observations and take necessary screenshots of your results.

12. Repeat the previous step with the last set of A and B points. What is different between this set of points and the first? Make note of your observations and take necessary screenshots of your results.

13. Stop the model.

14. While supporting the arm, turn OFF the manipulator using the power switch at the rear end of the base of the manipulator, and then move it to the rest position.