QArm Lab Procedure
Visual Servoing

Setup

1. It is recommended that you run this lab individually.
2. Move the QArm manipulator to the home position, and turn ON the unit using the power switch located on the rear side of the base. Once powered, the manipulator should hold this position.
3. This lab will use the following MATLAB model:
    a. VisualServoing.slx

Exploration

Part 1

1. Open the Simulink model LowLevelControlWristPosition.slx (Figure 1). In this part of the lab you will monitor the position performance of the wrist in the QArm.

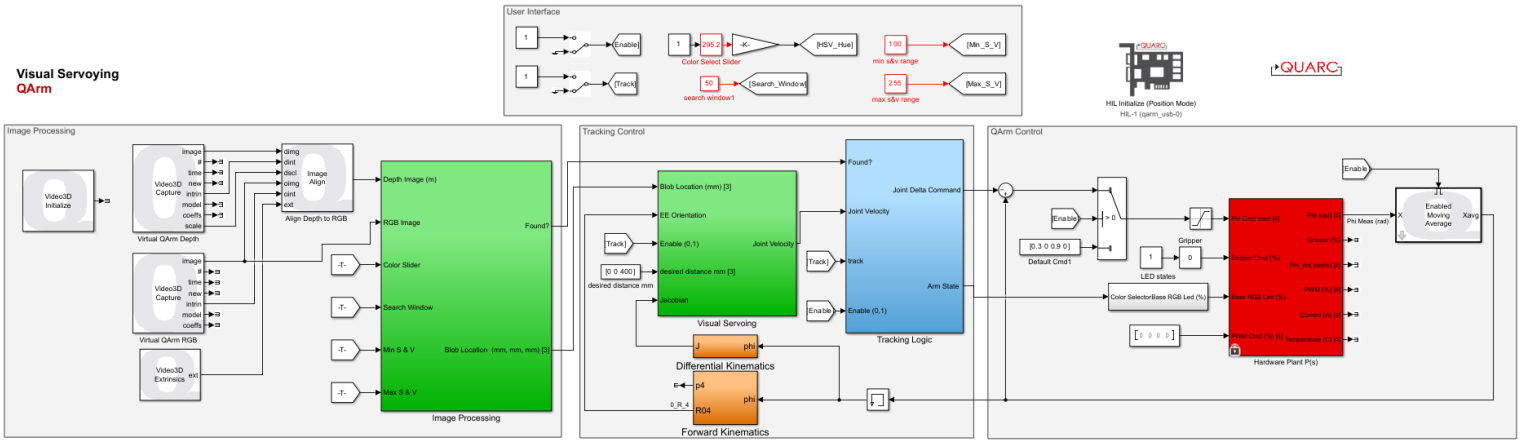

Figure 1: Simulink model that controls the QArm in Position Mode

2. Before making any changes to the model, open the model's Configuration Parameters and verify that they are configured as follows:
    a. Solver type: Fixed-step
    b. Solver: ode4 (Runge-Kutta)
    c. Fixed-step size (fundamental sample time): 500 Hz
3. Build and deploy the model using the Monitor & Tune action. Once started, the model will command [0,0,0,0.9] rad angles to all four of the manipulator's joints.

4. The next step is to to use the User Interface Group to select the color which the QArm will track during the lab.

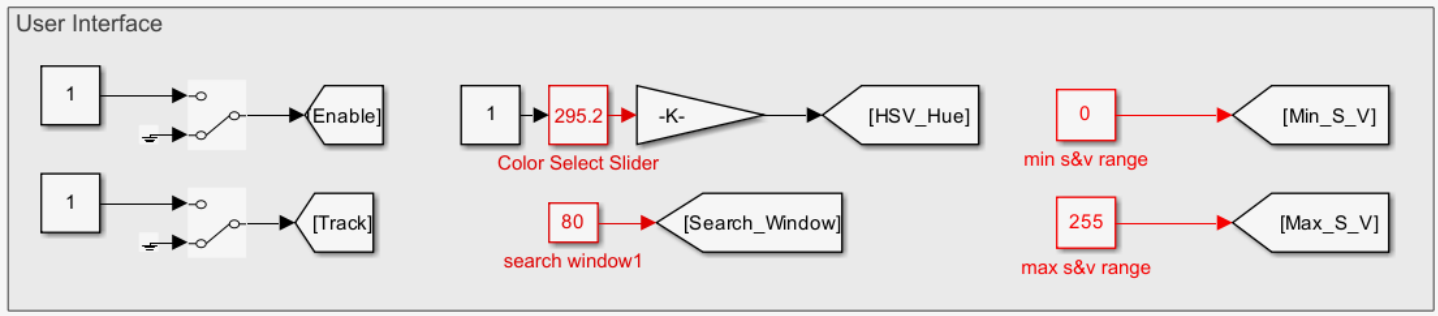

Figure 2: QArm User Interface Group,

5. Double click the Color Select Slider and change the angular value for the color you want to track. Use the Color Tracking Monitor video display to monitor the bitonal image for the color you want to track.

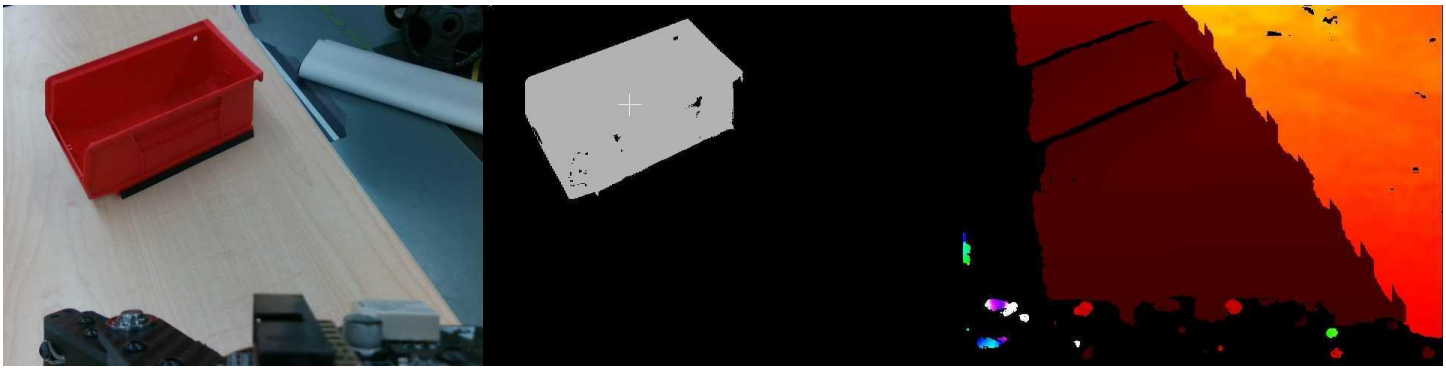

Figure 3: Example for successfully tracking a red object

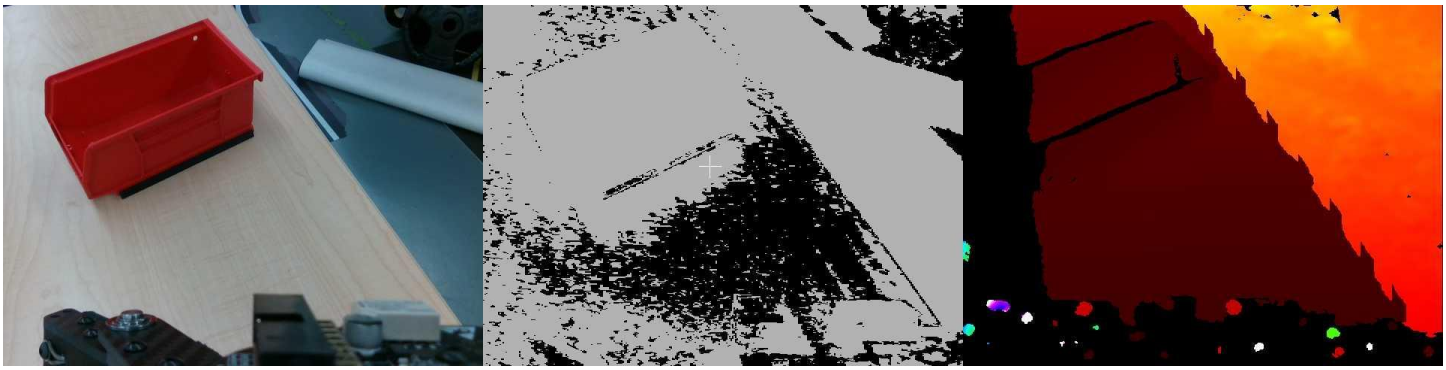

Figure 4: Example for uncessfull tracking a red object

Modify the Search Window, Min S&V range, Max S&V range to improve the tracking performance for following a single color.

Note: Do not continue beyond this point if the object tracking performance does not look like Figure 3.

6. Looking at the colorized depth image on the right hand side of the Color Tracking Monitor video display what do you notice about the valid areas of depth measurements?

7. Double click the Image Processing subsystem. Depending on the lighting conditions you may need to enable the bitonal image filtering done by the minimum and maximum filters. Double click the Enable Filter manual switch to obtain a sharper bitonal image.

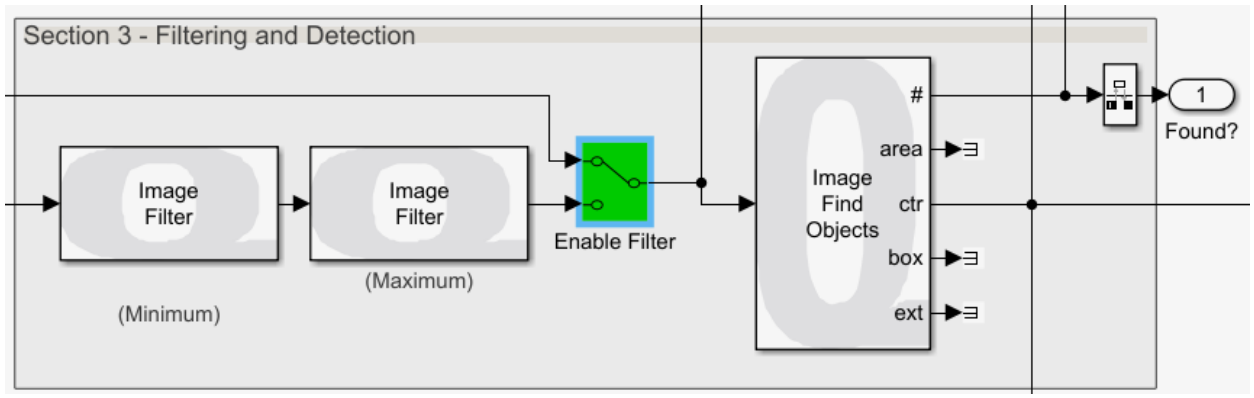

Figure 5: Image Filtering Group inside the Image processing subsystem.

8. Go to Section 4 – Pixel to Camera to Wrist Reference Frame Transformation . We will be modifying 2 constants: Camera Intrinsic Matrix and the Camera to Wrist Transformation. Review Lab 10 concept review to understand the purpose of these two matricies. If necessary calibrate the QArm D415 camera using the MATLAB camera calibration tool to obtain the camera intrinsic parameters for a camera using a resolution of [640,480]

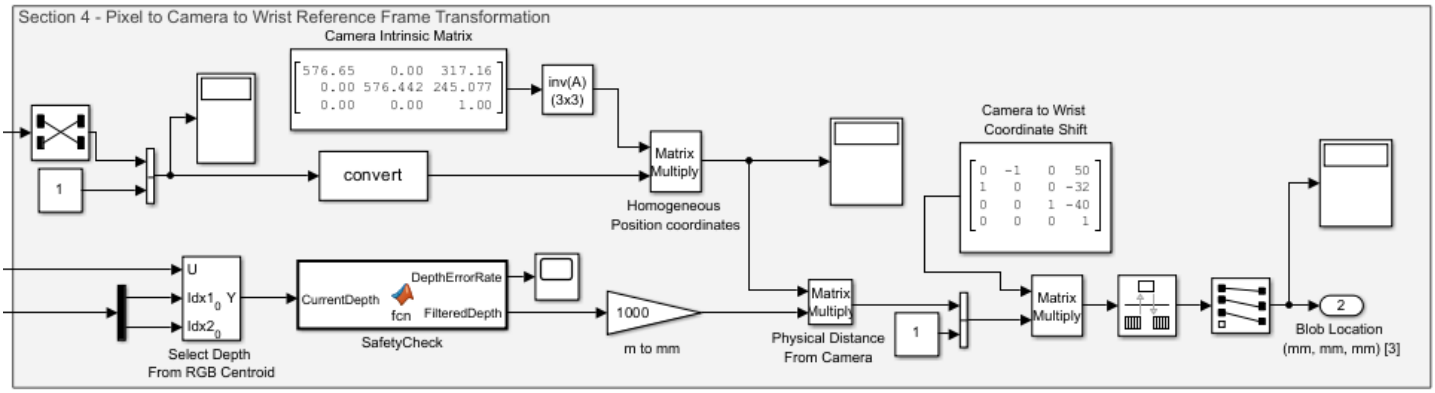

Figure 6: Pixel coordinates to QArm Wrist coordinate transformation.

To confirm if you're response is correct use the following test:

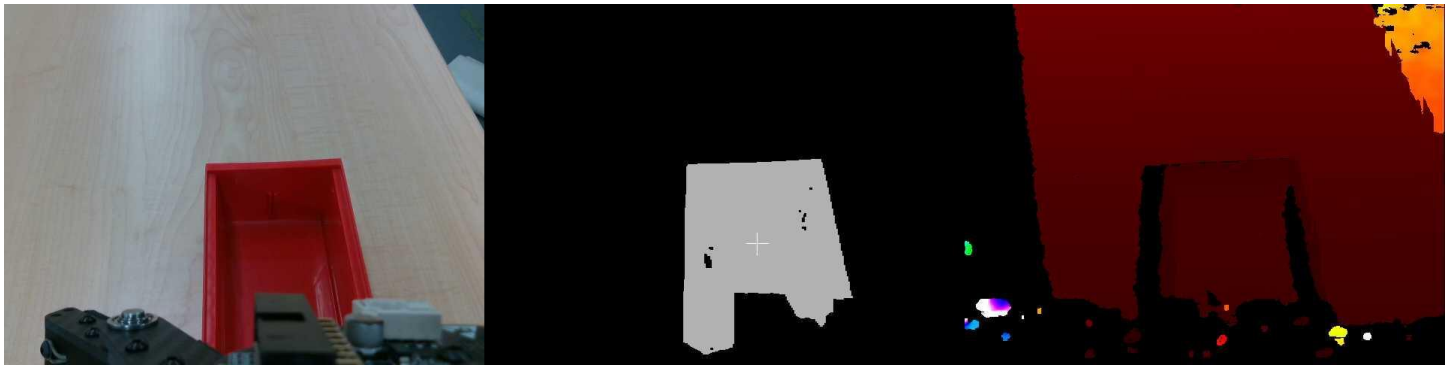

Figure 7: Test object roughly 344mm infront of QArm Wrist.

The blob location should read roughly $[0.5,\ -0.5, 344]mm$.

9. The next step is to enable the PD controller used to maintain the QArm D415 in view of the object of interest. In the User Interface Group double click the manual switch conntected to Enable to set the QArm to the tracking ready state. You'll notice the QArm does not move right away.

10. Our first step is to enable the Proportional Control Gains for the QArm vision tracking controller.

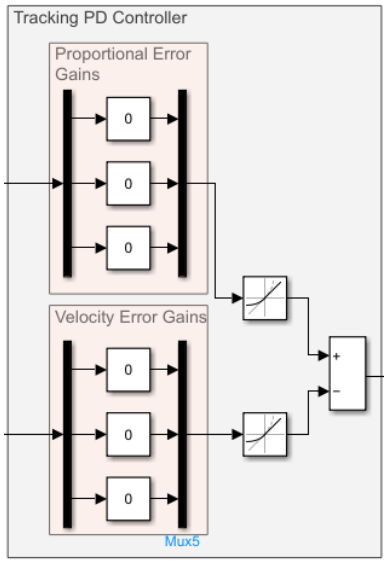

Figure 8: Visual Servoying PD Controller slider gains.

11. In the User Interface Group double click the manual switch conntected to Track to set the QArm Motion to start.

12. Double click the manual switch tied to the Enable Cmd.

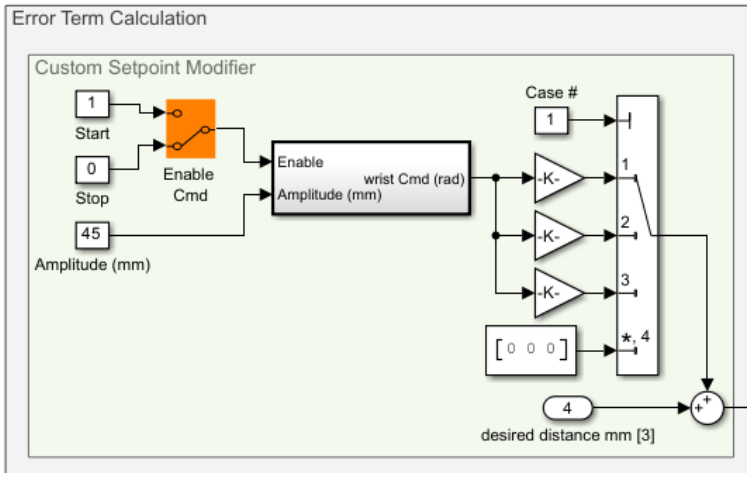

Figure 9: Custom setpoint modifier for testing PD Controller.

The QArm will pulse along the x direction of the wrist frame of reference. Change the Case number from 1, to 2, to 3 to monitor the tracking performance along the three axis.

13. Double click the manual switch tied to the Enable Cmd to select 0 and stop the movement of the QArm.

14. Now in the Tracking PD Controller group use the slider gains to enable the Velocity Error Gains.

15. Once again in the Custom Setpoint Modifier double click the manual switch tied to the Enable Cmd manual switch to 1. Change the Case number from 1, to 2, to 3 to monitor the tracking performance along the three axis.

16. Was the tracking performance improved? Why or why not? What else would you include in the tracking performance controller to improve the motion of the QArm?

17. By default the desired tracking distance is set to $[0\ 0\ 400]mm$. Once the QArm has stopped moving make a note the location of the Cross in the bitonal image shown in the Color Tracking Monitor video display

18. Change the desired distance to be $[50 - 32\ 400]mm$. Use the save icon on the video display to save the obtained image. What do you notice about the wrist of the QArm and the RGB image in the Color Tracking Monitor video display.

19. In the User Interface Group double click the manual switch conntected to Track to set the QArm Motion to stop.

20. Press the Stop button to end the experiment, you have reached the end of the visual servoying lab.

21. Move The QArm into the rest position.