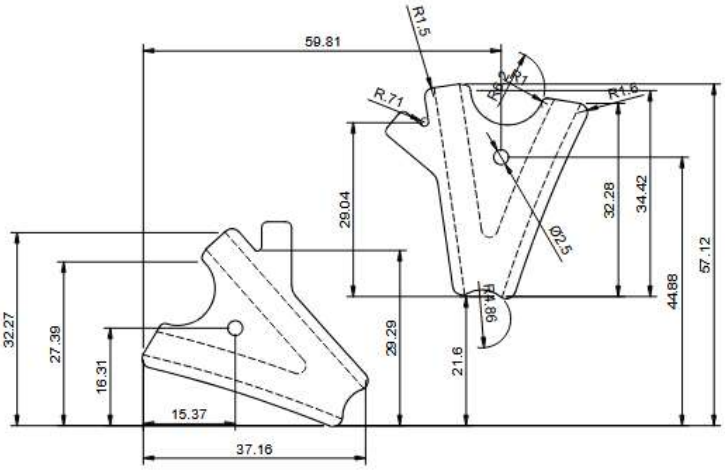

Dwgn.	Technical reference	Created by: Amanda Bak Christensen 25-05-2025	Approved by:
		Document type	Document status
		Title: Feet_top	DWG No.
			Rev. / Date of issue / Sheet 1/2

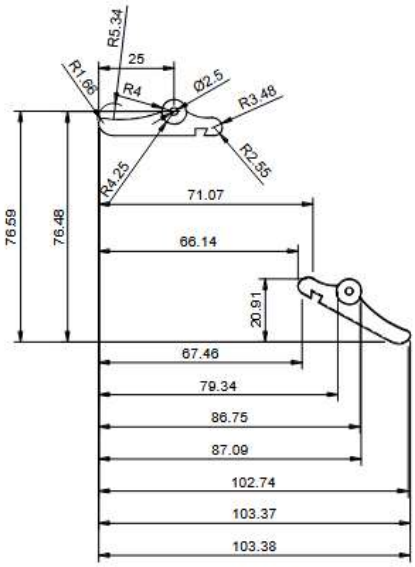

Dwgn.	Technical reference	Created by: Amanda Bak Christensen 25-05-2025	Approved by:
		Document type	Document status
		Title: Feet_bottom	DWG No.
			Rev. / Date of issue / Sheet 2/2

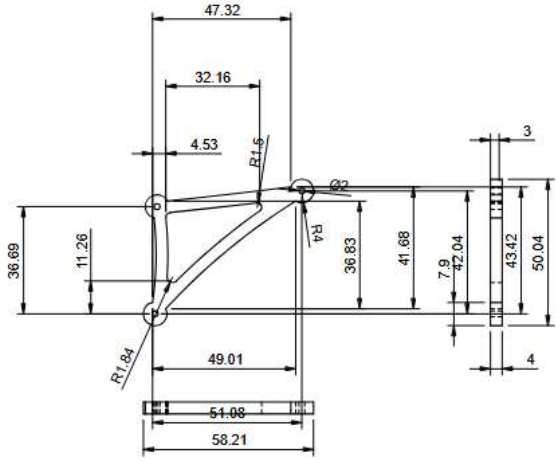

Dept.	Technical reference	Created by: Amanda Bak Christensen 25-05-2025	Approved by:
		Document type:	Document status:
		Title: Leg_a	DWG No.:
			Rev.: / Date of issue: / Sheet: 1/1

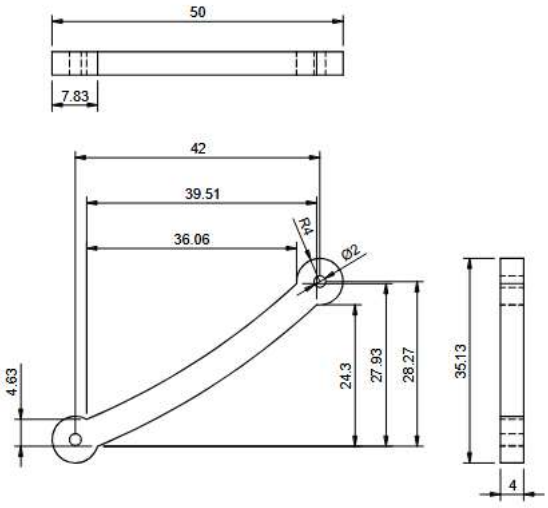

Dept.	Technical reference	Created by: Amanda Bak Christensen 25-05-2025	Approved by:
		Document type:	Document status:
		Title: Leg_b	DWG No.:
			Rev.: / Date of issue: / Sheet: 1/1

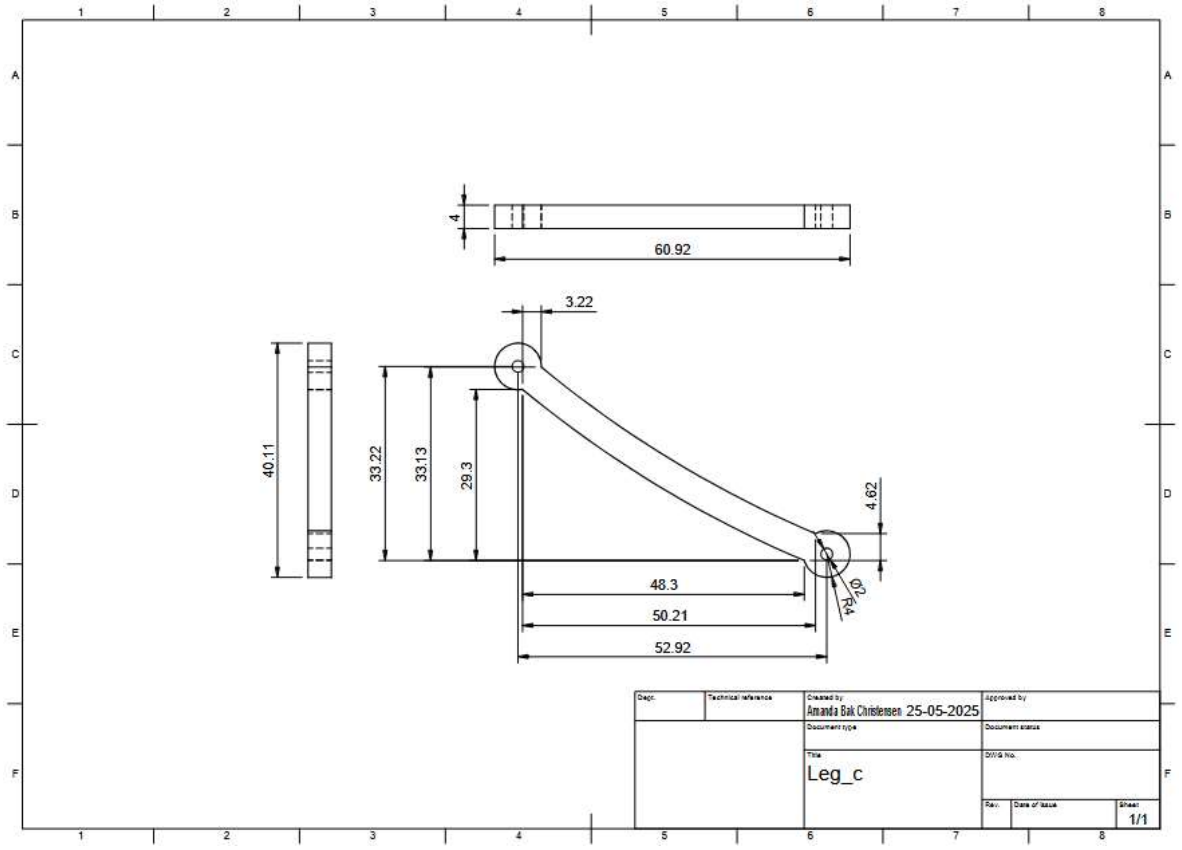
4
60.92
3.22
40.11
33.22
33.13
29.3
4.62
48.3
50.21
52.92
Ø2
R4
Dwgr.
Technical reference
Created by
Amanda Bak Christensen 25-05-2025
Approved by
Document type
Document status
Title
Leg_c
DWG No.
Rev.
Date of issue
Sheet
1/1

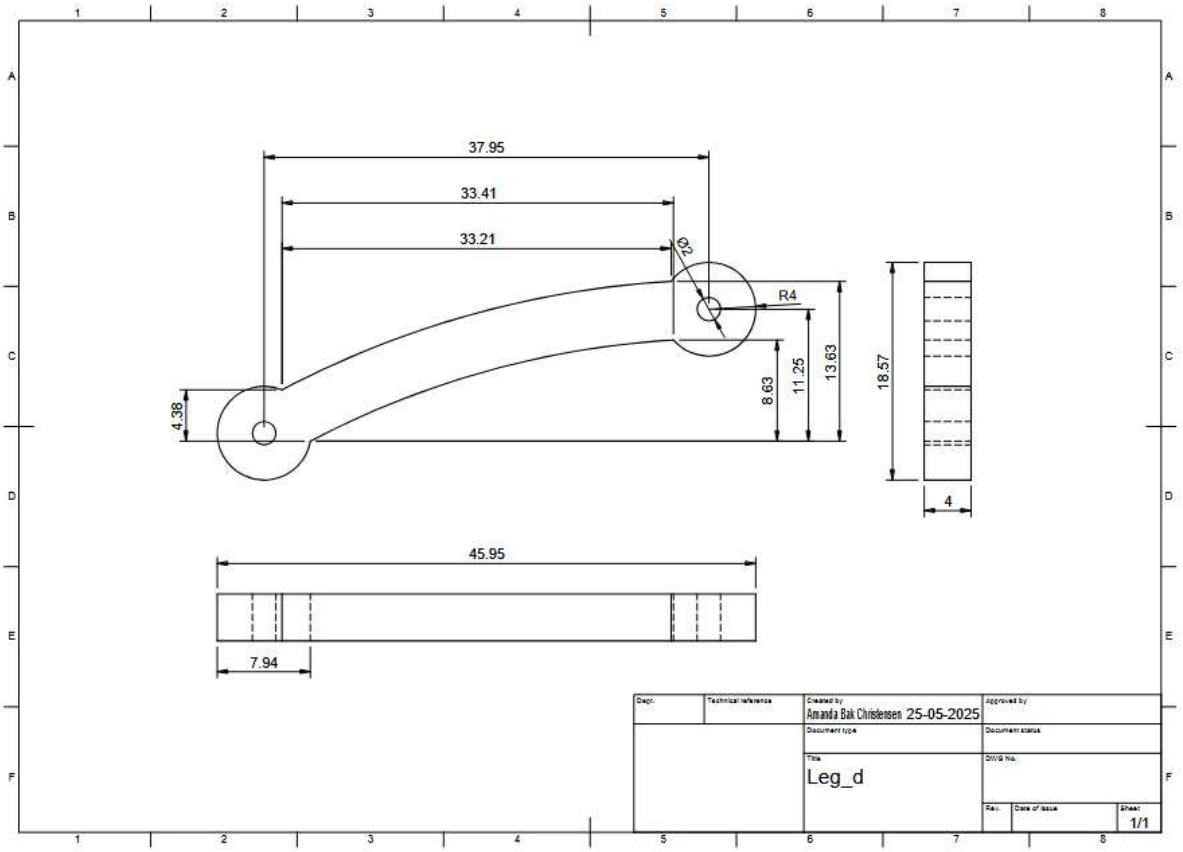
37.95
33.41
33.21
Ø2
R4
4.38
8.63
11.25
13.63
18.57
4
45.95
7.94
Dwgr.
Technical reference
Created by
Amanda Bak Christensen 25-05-2025
Approved by
Document type
Document status
Title
Leg_d
DWG No.
Rev.
Date of issue
Sheet
1/1

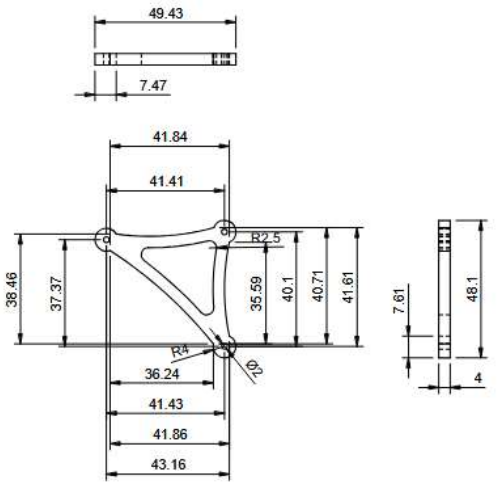

Dept.	Technical reference	Created by: Amanda Bak Christensen 25-05-2025	Approved by:
		Document type	Document status
		Title: Leg_e	DWG No.
			Rev. / Date of issue / Sheet: 1/1

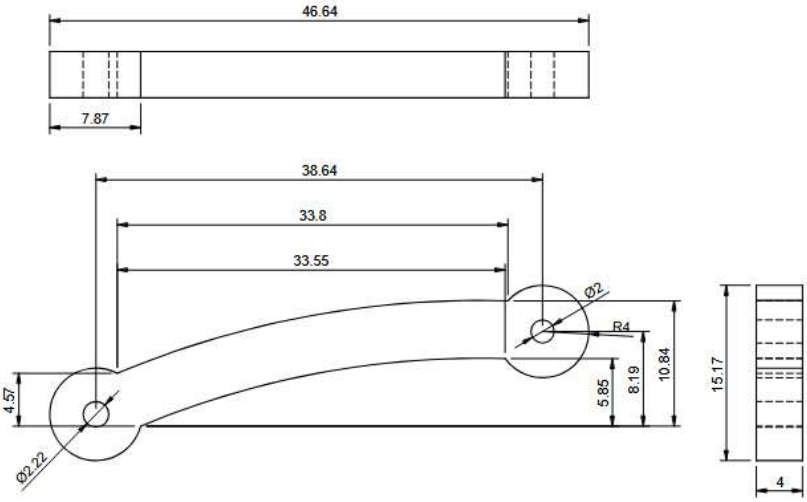

Dept.	Technical reference	Created by: Amanda Bak Christensen 25-05-2025	Approved by:
		Document type	Document status
		Title: Leg_f	DWG No.
			Rev. / Date of issue / Sheet: 1/1

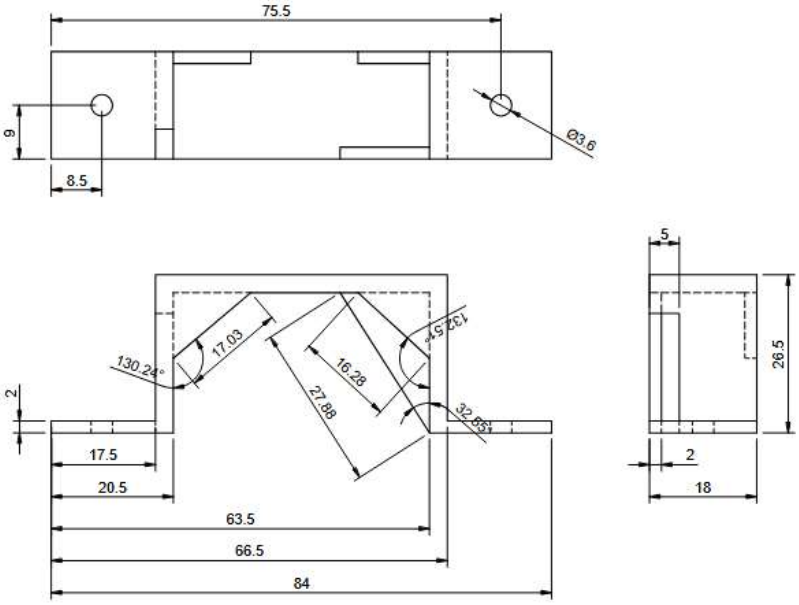

Depr.	Technical reference	Created by: Amanda Bak Christensen 25-05-2025	Approved by:
		Document type	Document status
		Title: motorClamp_left	DWG No.
			Rev. / Date of issue / Sheet: 1/1

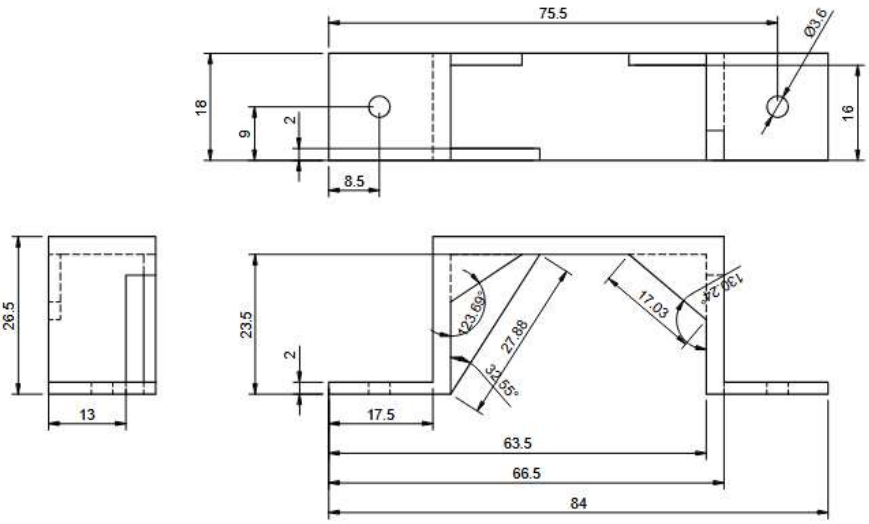

Depr.	Technical reference	Created by: Amanda Bak Christensen 25-05-2025	Approved by:
		Document type	Document status
		Title: motorClamp_right	DWG No.
			Rev. / Date of issue / Sheet: 1/1

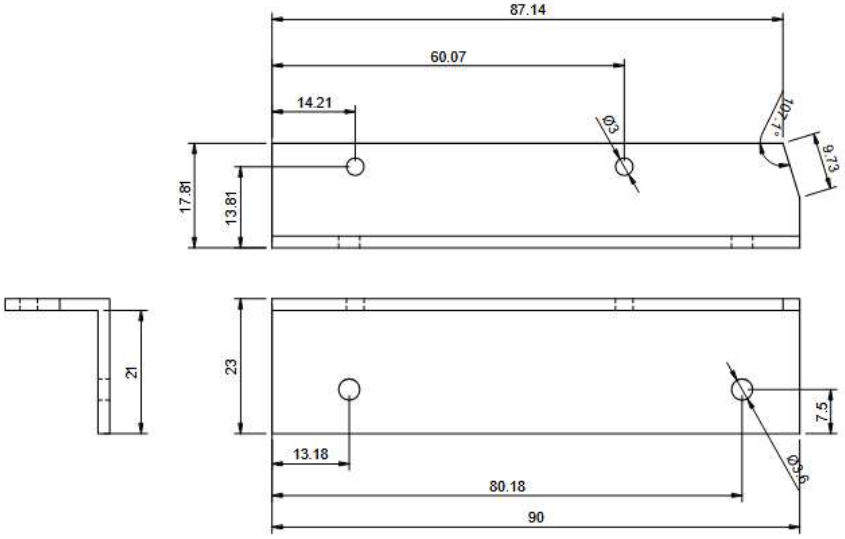

Dwgr.	Technical reference	Created by: Amanda Bak Christensen 25-05-2025	Approved by:
		Document type:	Document status:
		Title: Left_L_bracket	DWG No.:
			Rev. / Date of issue / Sheet: 1/1

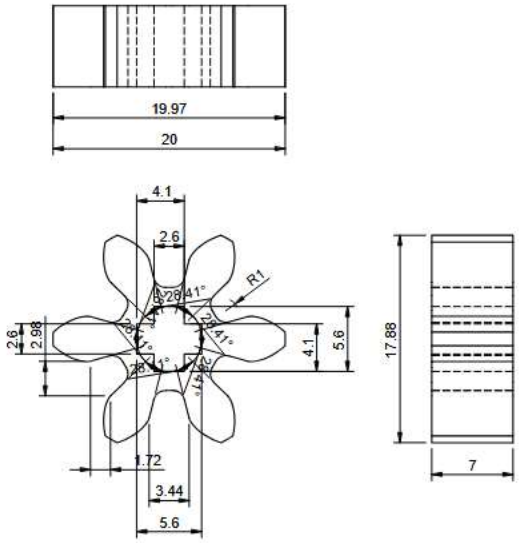

Dwgr.	Technical reference	Created by: Amanda Bak Christensen 25-05-2025	Approved by:
		Document type:	Document status:
		Title: Spur Gear (6 teeth)	DWG No.:
			Rev. / Date of issue / Sheet: 1/1

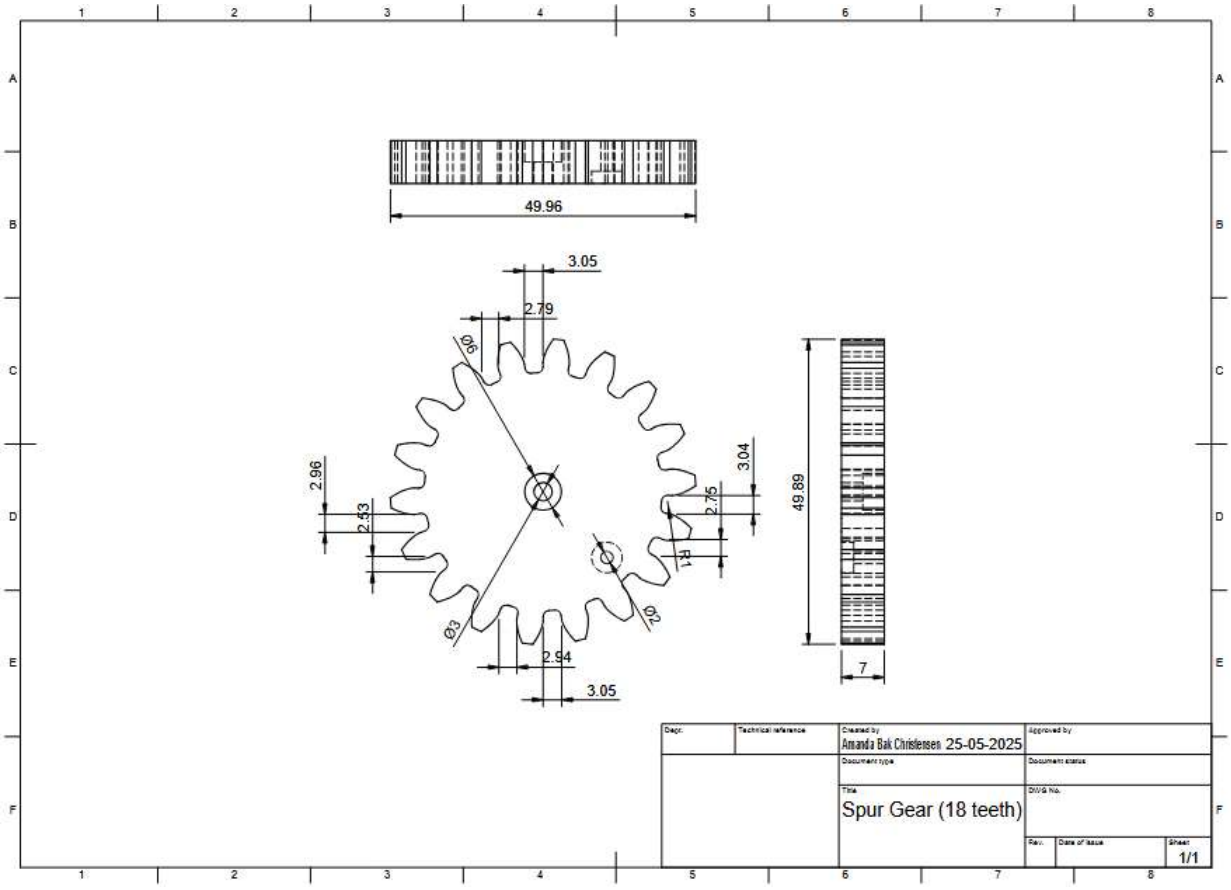
49.96
3.05
2.79
Ø6
2.96
2.43
3.04
2.75
R1
Ø2
Ø3
2.94
3.05
49.89
7
Dept.
Technical reference
Created by
Amanda Bak Christensen 25-05-2025
Approved by
Document type
Document status
Title
Spur Gear (18 teeth)
DWG No.
Rev.
Date of issue
Sheet
1/1

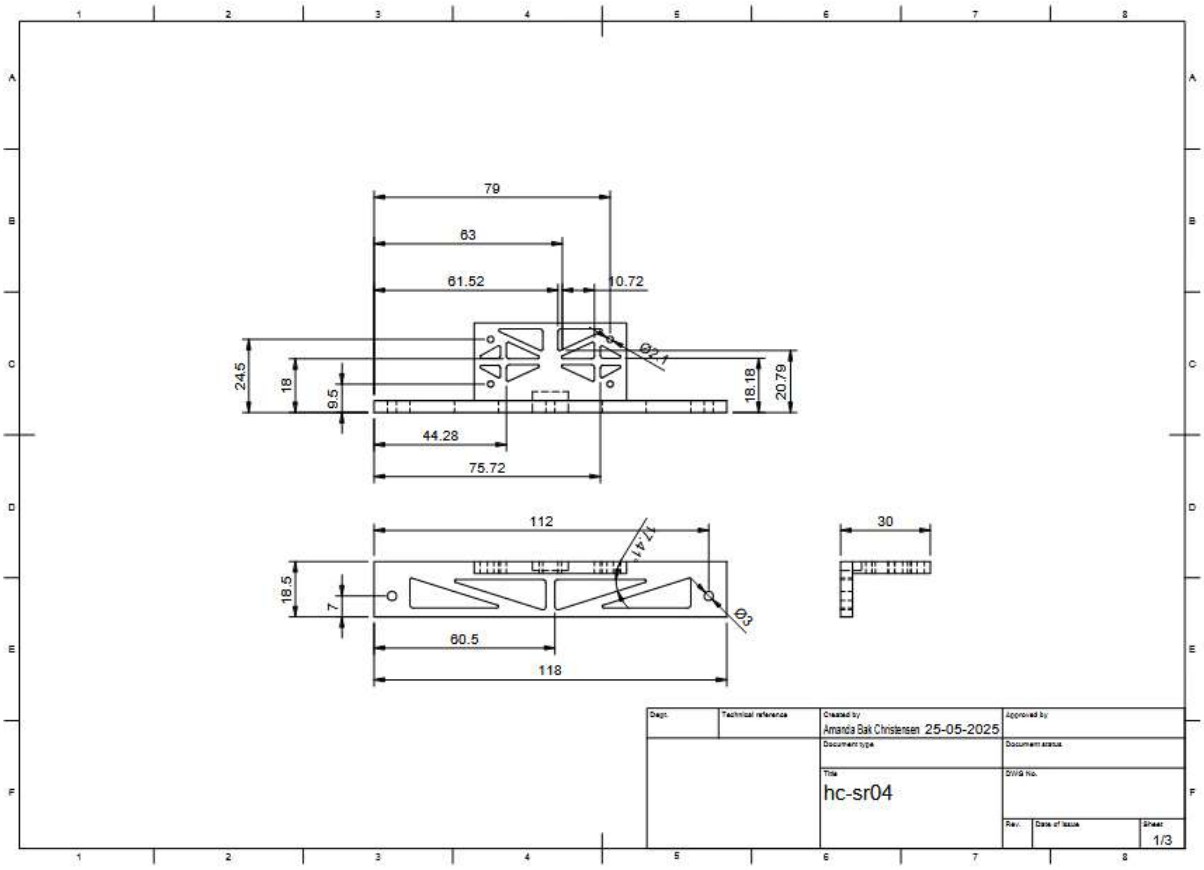
79
63
61.52
10.72
Ø2.1
24.5
18
9.5
18.18
20.79
44.28
75.72
112
17.41
30
18.5
7
Ø3
60.5
118
Dept.
Technical reference
Created by
Amanda Bak Christensen 25-05-2025
Approved by
Document type
Document status
Title
hc-sr04
DWG No.
Rev.
Date of issue
Sheet
1/3

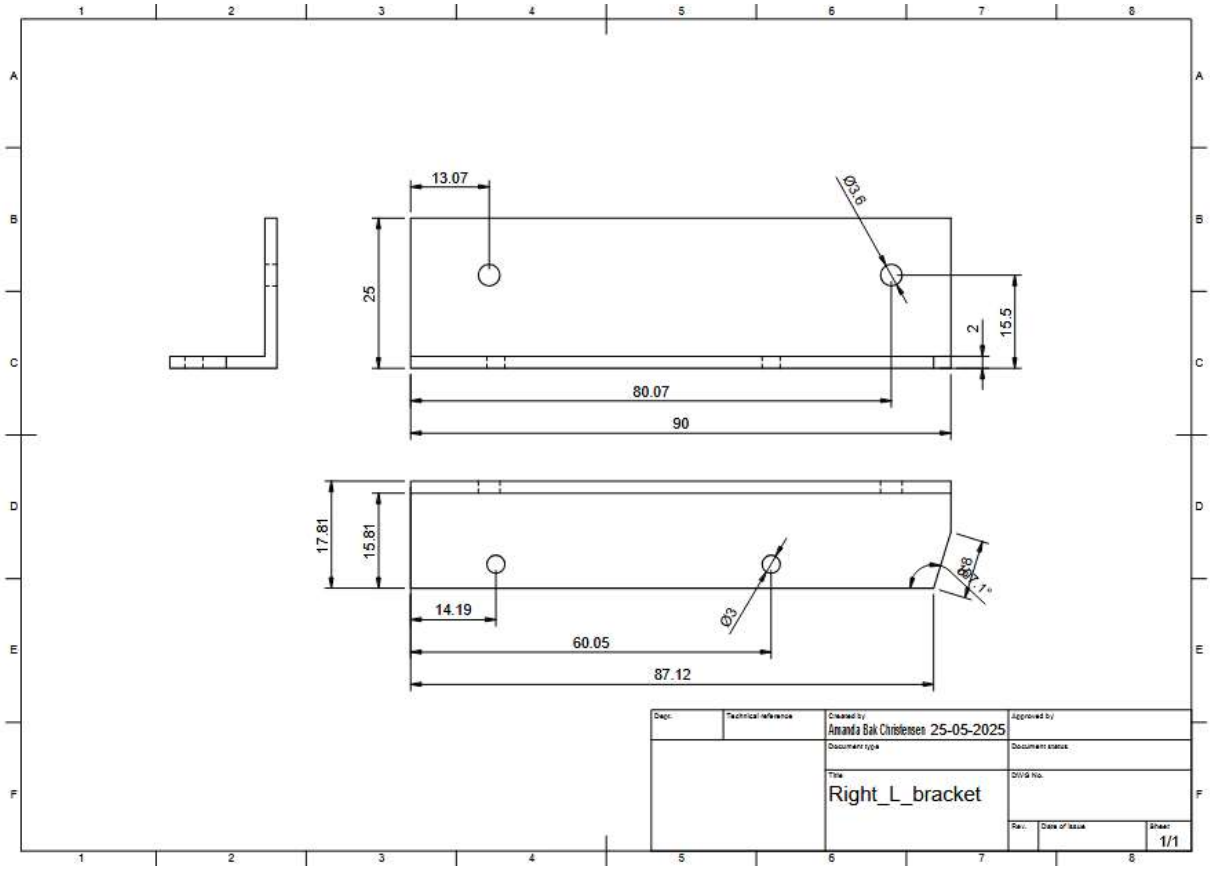
13.07
Ø3.6
25
2
15.5
80.07
90
17.81
15.81
8
7°
14.19
Ø3
60.05
87.12
Dept.
Technical reference
Created by
Amanda Bak Christensen 25-05-2025
Approved by
Document type
Document status
Title
Right_L_bracket
DWG No.
Rev.
Date of issue
Sheet
1/1

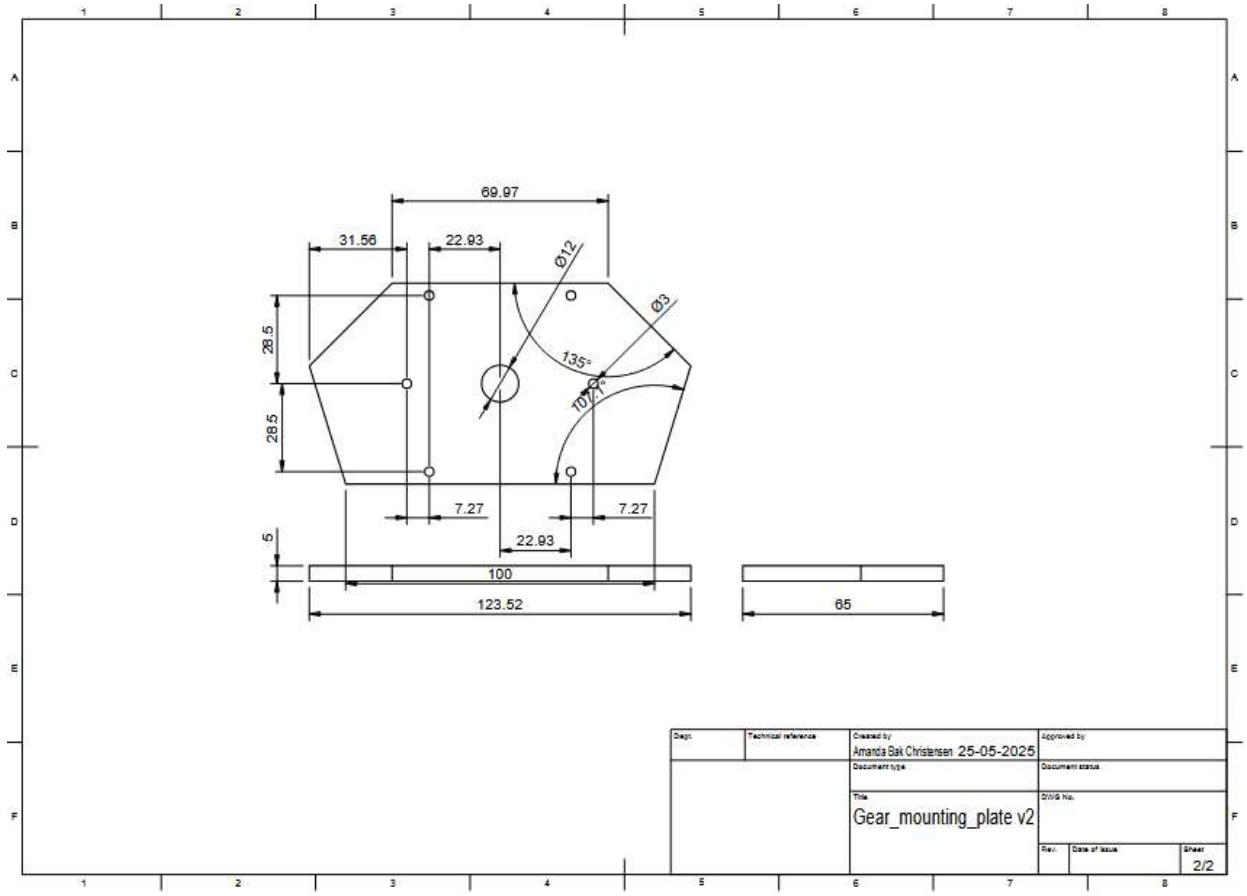
69.97
31.56
22.93
Ø12
Ø3
28.5
28.5
135°
107.1°
7.27
7.27
22.93
5
100
123.52
65
Dept.
Technical reference
Created by
Amanda Bak Christensen 25-05-2025
Approved by
Document type
Document status
Title
Gear_mounting_plate v2
DWG No.
Rev.
Date of issue
Sheet
2/2

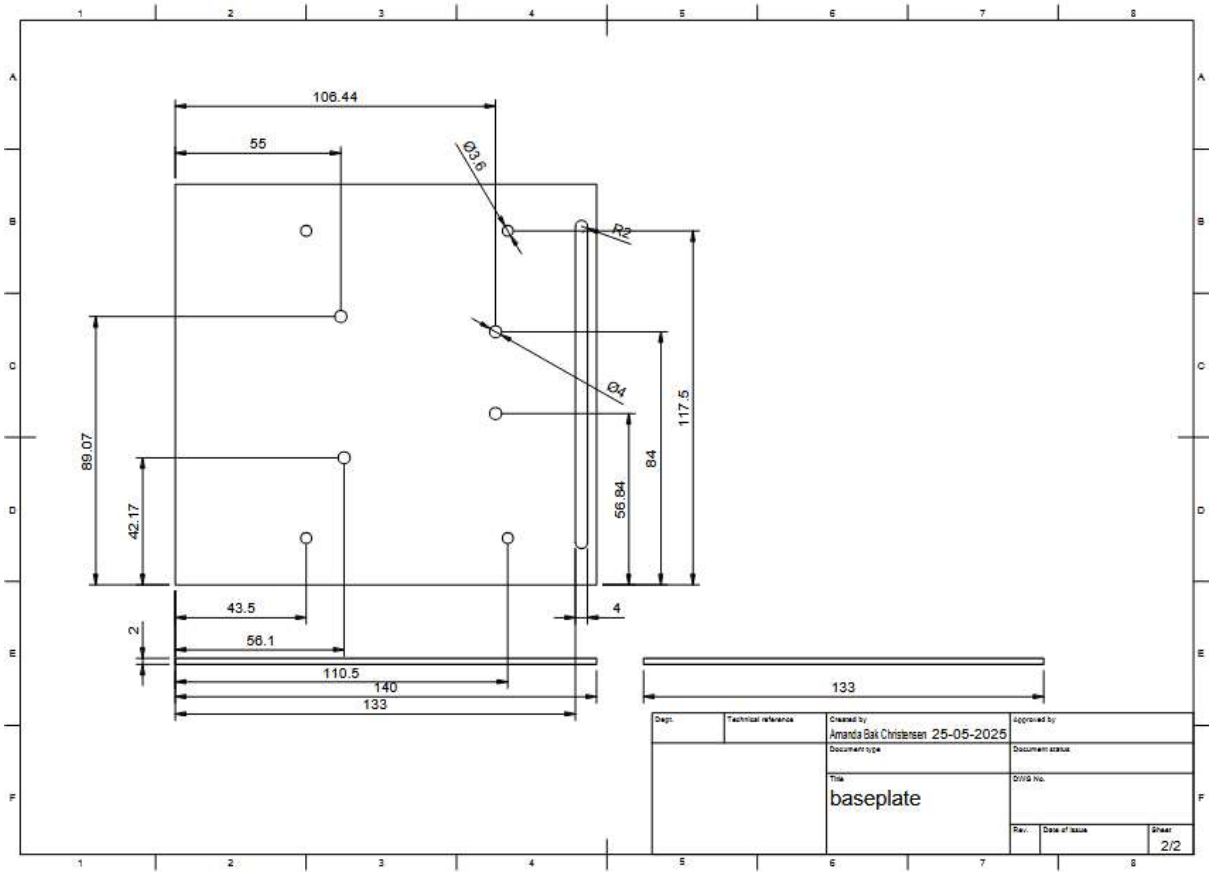
106.44
55
Ø3.6
R2
Ø4
117.5
84
56.84
89.07
42.17
43.5
56.1
2
110.5
140
133
4
133
Design
Technical reference
Created by
Amanda Bak Christensen 25-05-2025
Approved by
Document type
Document status
Title
baseplate
DWG No.
Rev.
Date of issue
Sheet
2/2