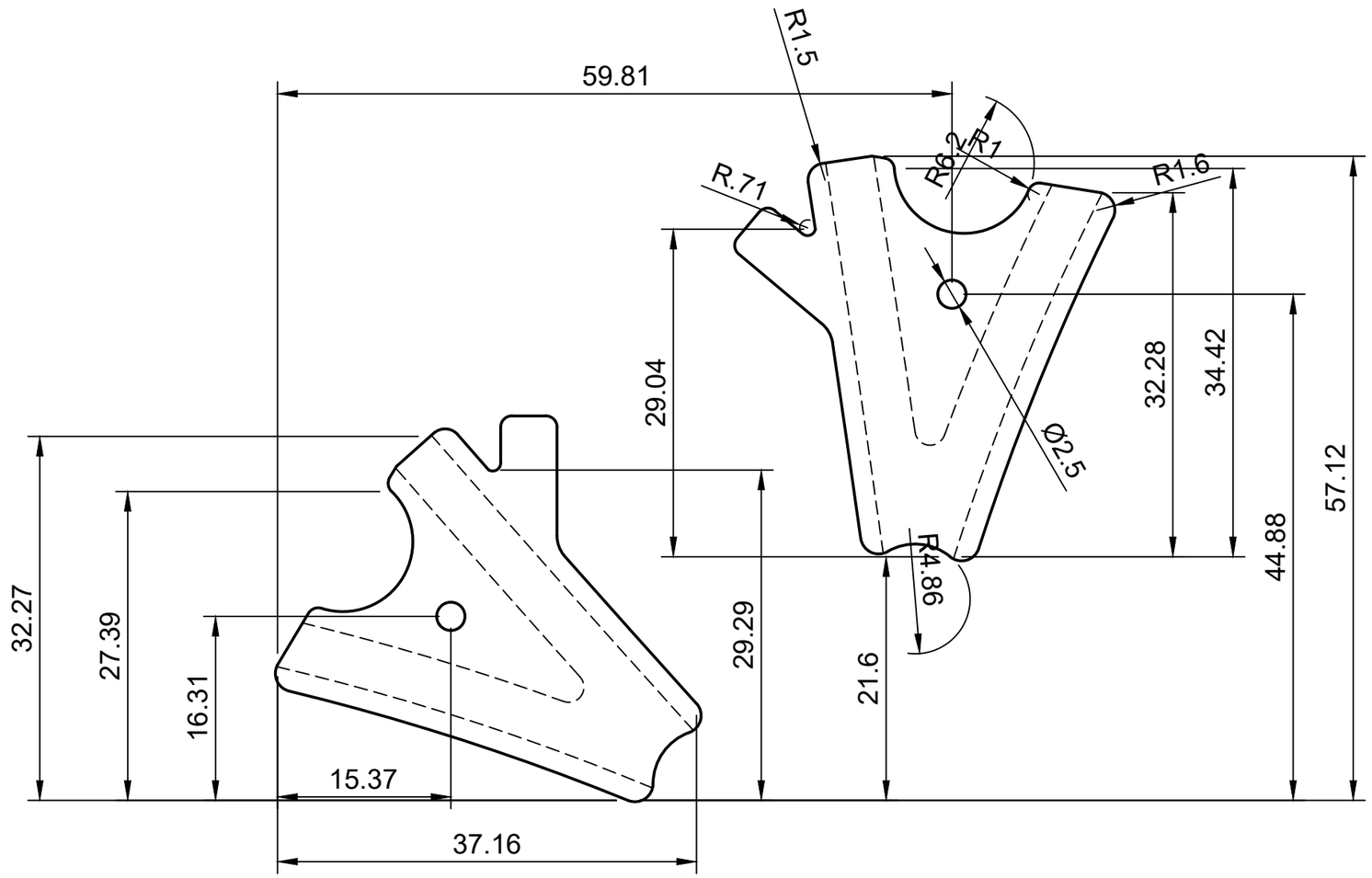

Dept.	Technical reference	Created by Amanda Bak Christensen 25-05-2025	Approved by	
		Document type	Document status	
		Title Feet_top	DWG No.	
			Rev. / Date of issue	Sheet 1/2

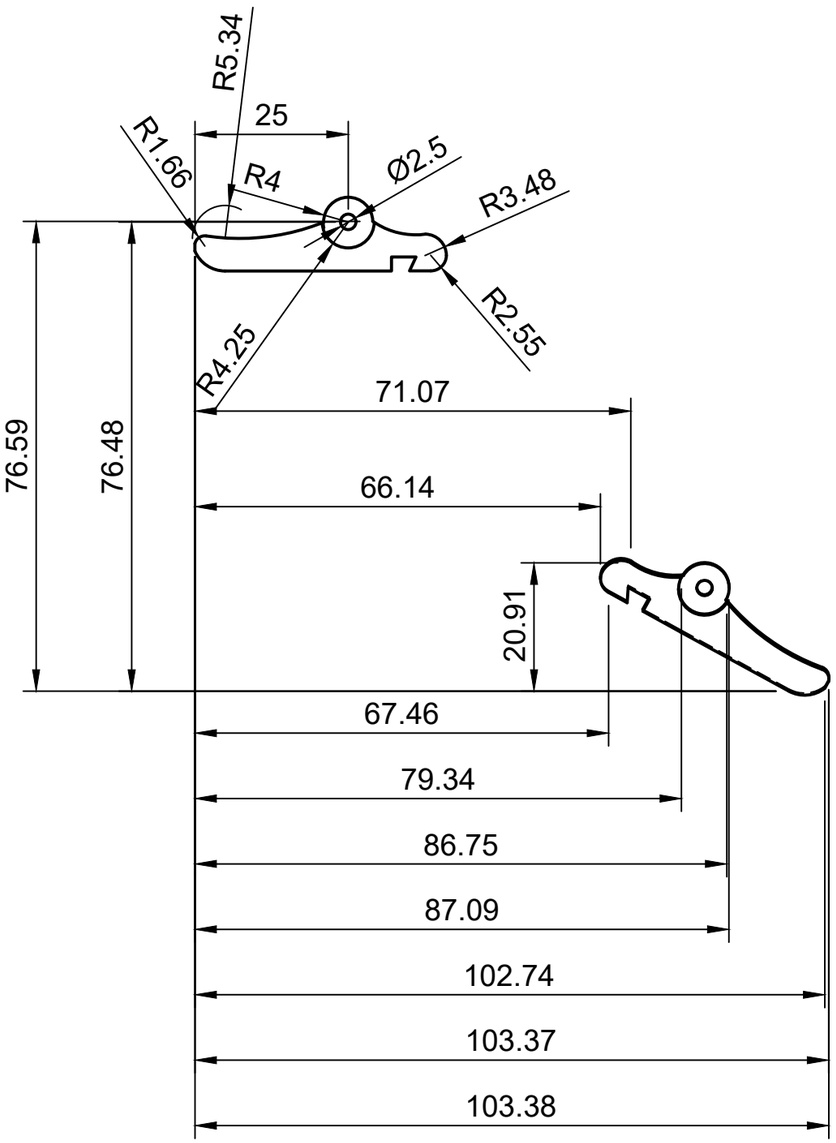

Dept.	Technical reference	Created by Amanda Bak Christensen 25-05-2025	Approved by
		Document type	Document status
		Title Feet_bottom	DWG No.
			Rev. / Date of issue / Sheet 2/2