US009762251B2

(12) United States Patent
Josefsberg et al.

(10) Patent No.: US 9,762,251 B2
(45) Date of Patent: Sep. 12, 2017

(54) **ULTRA LOW PHASE NOISE FREQUENCY SYNTHESIZER**

(71) Applicants: **Yekutiel Josefsberg**, Netanya (IL); **Tal I. Lavian**, Sunnyvale, CA (US)

(72) Inventors: **Yekutiel Josefsberg**, Netanya (IL); **Tal I. Lavian**, Sunnyvale, CA (US)

(*) Notice: Subject to any disclaimer, the term of this patent is extended or adjusted under 35 U.S.C. 154(b) by 0 days.

(21) Appl. No.: **15/379,860**

(22) Filed: **Dec. 15, 2016**

(65) **Prior Publication Data**

US 2017/0099058 A1 Apr. 6, 2017

Related U.S. Application Data

(63) Continuation of application No. 15/229,915, filed on Aug. 5, 2016.

(Continued)

(51) **Int. Cl.**
H03L 7/087 (2006.01)
H03L 7/085 (2006.01)

(Continued)

(52) **U.S. Cl.**
CPC ***H03L 7/085*** (2013.01); ***H03L 7/07*** (2013.01); ***H03L 7/099*** (2013.01); ***H03L 7/24*** (2013.01)

(58) **Field of Classification Search**
CPC . H03L 7/085; H03L 7/07; H03L 7/099; H03L 7/24

(Continued)

(56) **References Cited**

U.S. PATENT DOCUMENTS

6,085,151 A 7/2000 Farmer et al.
6,122,326 A 9/2000 Jackson et al.

(Continued)

FOREIGN PATENT DOCUMENTS

WO 03026133 A1 3/2003

OTHER PUBLICATIONS

Gismero, J. et al., "9 GHz phase locked oscillator using a sampling phase detector. Application to VSAT local oscillators (18-27 GHz)," European Microwave Conference, 23rd IEEE, Oct. 1, 1993, pp. 784-786.

(Continued)

Primary Examiner — Dinh T Le
(74) *Attorney, Agent, or Firm* — Remarck Law Group PLC

(57) **ABSTRACT**

A system for providing ultra low phase noise frequency synthesizers using Fractional-N PLL (Phase Lock Loop), Sampling Reference PLL and DDS (Direct Digital Synthesizer). Modern day advanced communication systems comprise frequency synthesizers that provide a frequency output signal to other parts of the transmitter and receiver so as to enable the system to operate at the set frequency band. The performance of the frequency synthesizer determines the performance of the communication link. Current days advanced communication systems comprises single loop Frequency synthesizers which are not completely able to provide lower phase deviations for errors (For 256 QAM the practical phase deviation for no errors is 0.4-0.5°) which would enable users to receive high data rate. This proposed system overcomes deficiencies of current generation state of the art communication systems by providing much lower level of phase deviation error which would result in much higher modulation schemes and high data rate.

17 Claims, 22 Drawing Sheets

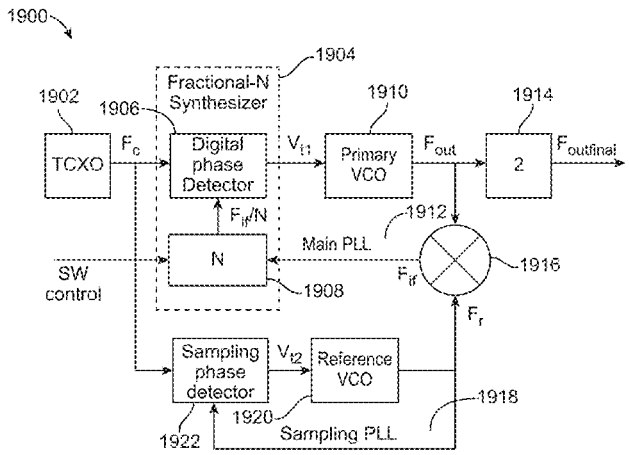

Related U.S. Application Data

(60) Provisional application No. 62/181,221, filed on Jun. 18, 2015.

(51) **Int. Cl.**
H03L 7/099 (2006.01)
H03L 7/07 (2006.01)
H03L 7/24 (2006.01)

(58) **Field of Classification Search**
USPC ..... 327/147–159, 105–107, 111–114; 331/2, 331/11, 18, 40, 47, 1 R, 10
See application file for complete search history.

(56) **References Cited**

U.S. PATENT DOCUMENTS

6,366,620 B1 4/2002 Jackson et al.
6,657,464 B1 12/2003 Balardeta et al.
7,102,446 B1 9/2006 Lee et al.
7,391,839 B2 * 6/2008 Thompson H03L 7/16 327/156
7,545,224 B2 * 6/2009 Chow H03L 7/10 331/16
7,656,236 B2 2/2010 Williams
7,737,880 B2 6/2010 Vacanti
8,049,656 B2 11/2011 Shani et al.
8,378,751 B2 * 2/2013 Fagg H03L 7/185 331/10
8,704,562 B2 * 4/2014 Nicholls H03L 7/185 327/144
8,816,777 B2 * 8/2014 Szilagyi H03L 7/08 327/156
9,470,784 B2 10/2016 Kishigami et al.
9,689,983 B2 6/2017 Cao et al.

OTHER PUBLICATIONS

Liman, R. et al, "Noise in Sampling Phase Detectors for RF PLL," Proceedings of the 39th European Microwave Conference, Sep. 29-Oct. 1, 2009, Rome, Italy, pp. 480-483.
Partial PCT International Search dated Jan. 9, 2017 for PCT International Application No. PCT/IB2016/054790, 3 pages.
Teng, K.H. et al., "Microwave Phase-Locked Loop Circuit Development and Efficiency Improvement," IEEE, High Frequency Postgraduate Student Colloquium, Sep. 8 and 9, 2003, pp. 128-131.
U.S. Appl. No. 15/229,915, filed Aug. 5, 2016, Josefsberg et al.
U.S. Appl. No. 15/379,915, filed Dec. 15, 2016, Josefsberg et al.
Henrickson, L. et al., "Low-Power Fully Integrated 10-Gb/s SONET/SDH Transceiver in 0.13 μm CMOS," IEEE Journal of Solid-State Circuits, vol. 38, No. 10, Oct. 2003, pp. 1595-1601.
PCT International Search Report and Written Opinion dated May 23, 2017 for PCT International Application No. PCT/IB2016/054790, 18 pages.

* cited by examiner

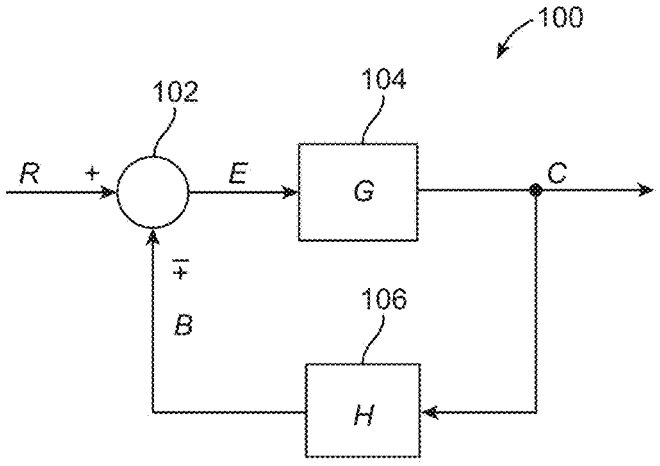
100
102
104
R
+
E
G
C
∓
B
106
H

FIG. 1

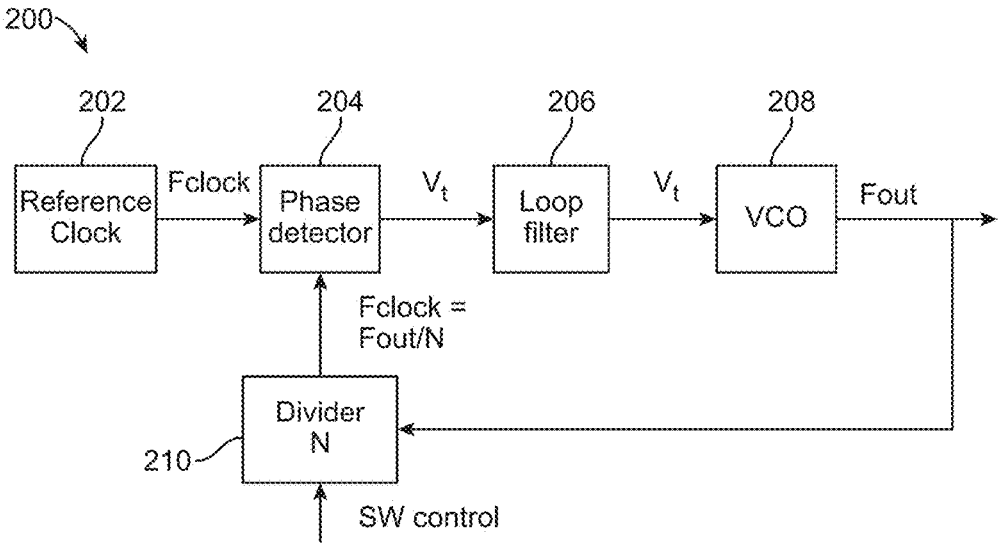
200
202
204
206
208
Reference Clock
Fclock
Phase detector
V_t
Loop filter
V_t
VCO
Fout
Fclock = Fout/N
Divider N
210
SW control

FIG. 2

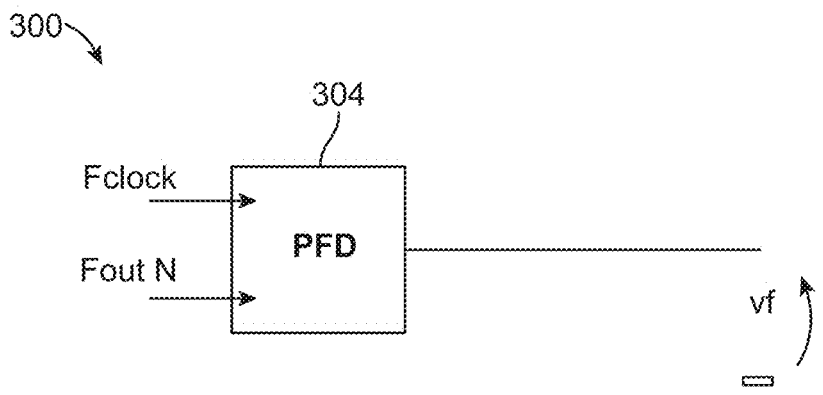

FIG. 3

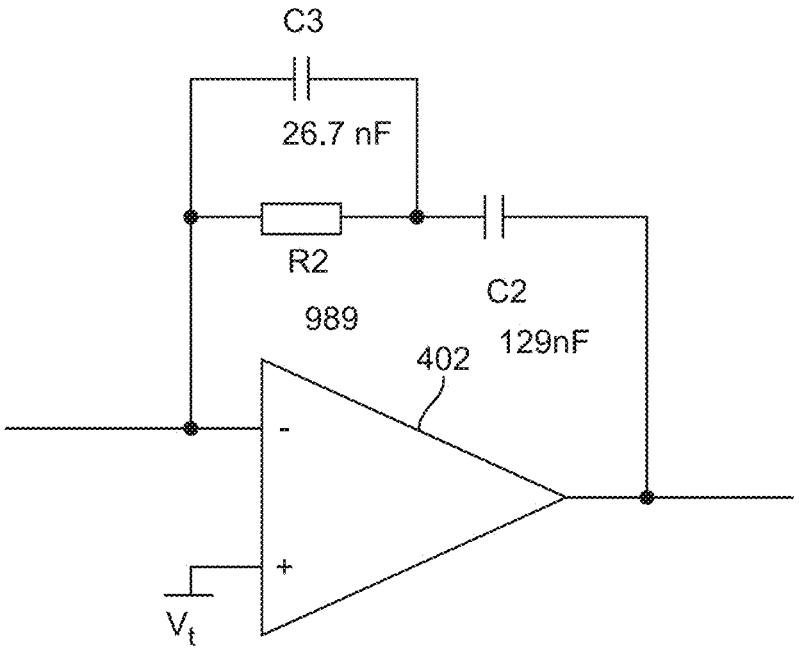

FIG. 4

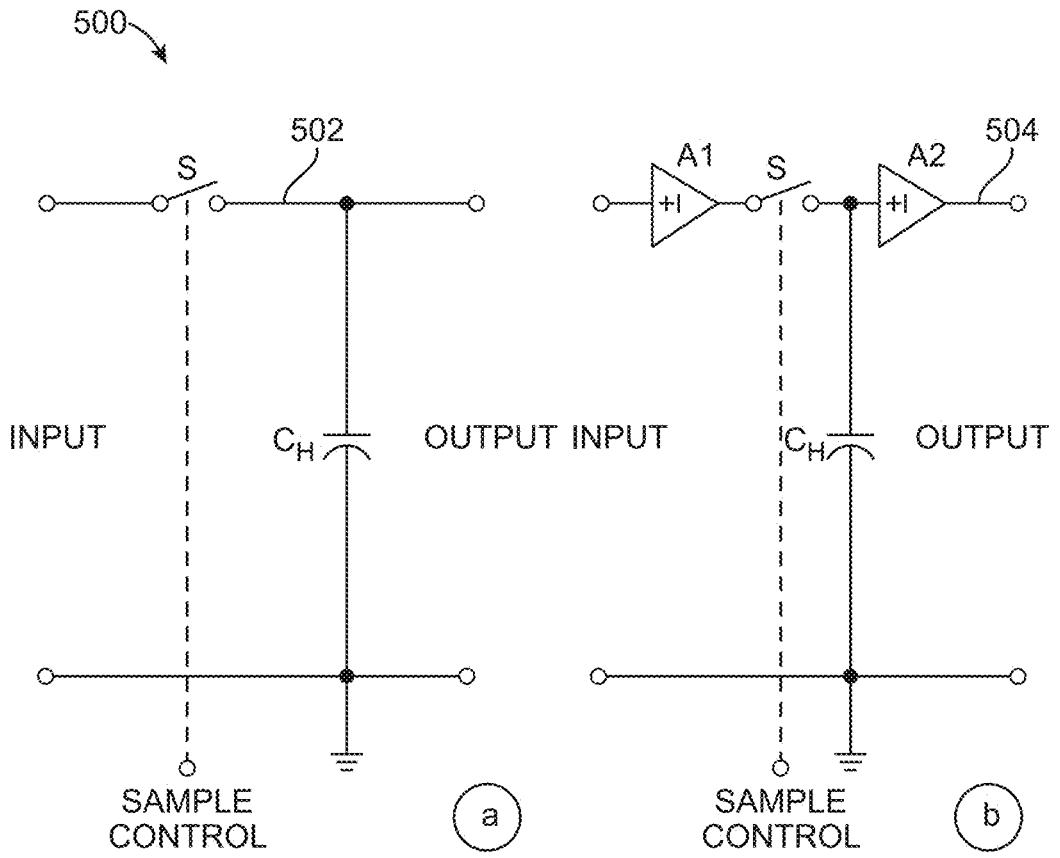
500
502
S
INPUT
C_H
OUTPUT
SAMPLE CONTROL
a
A1
S
A2
504
INPUT
C_H
OUTPUT
SAMPLE CONTROL
b

FIG. 5

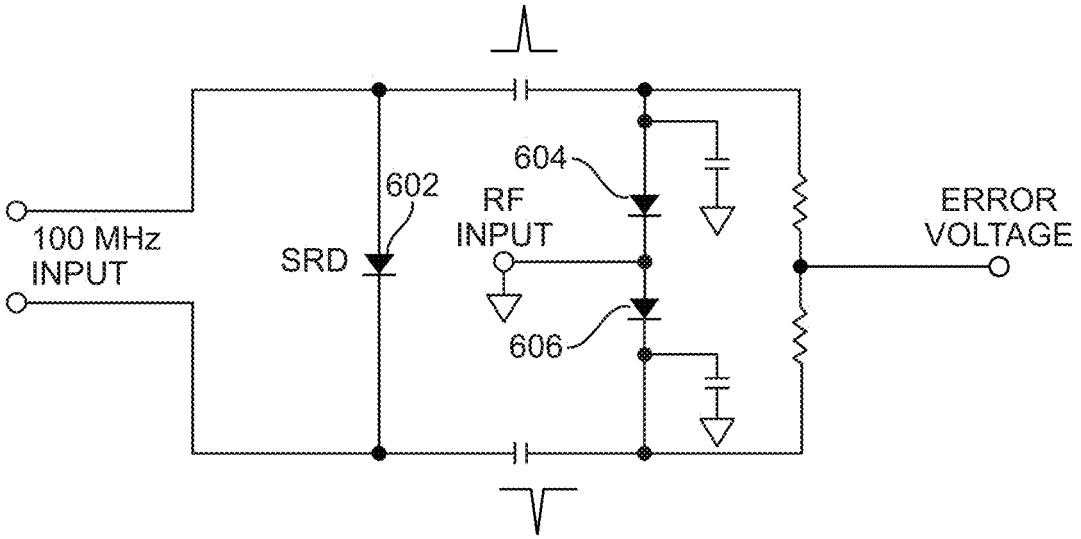
100 MHz INPUT
SRD
602
604
RF INPUT
606
ERROR VOLTAGE

FIG. 6

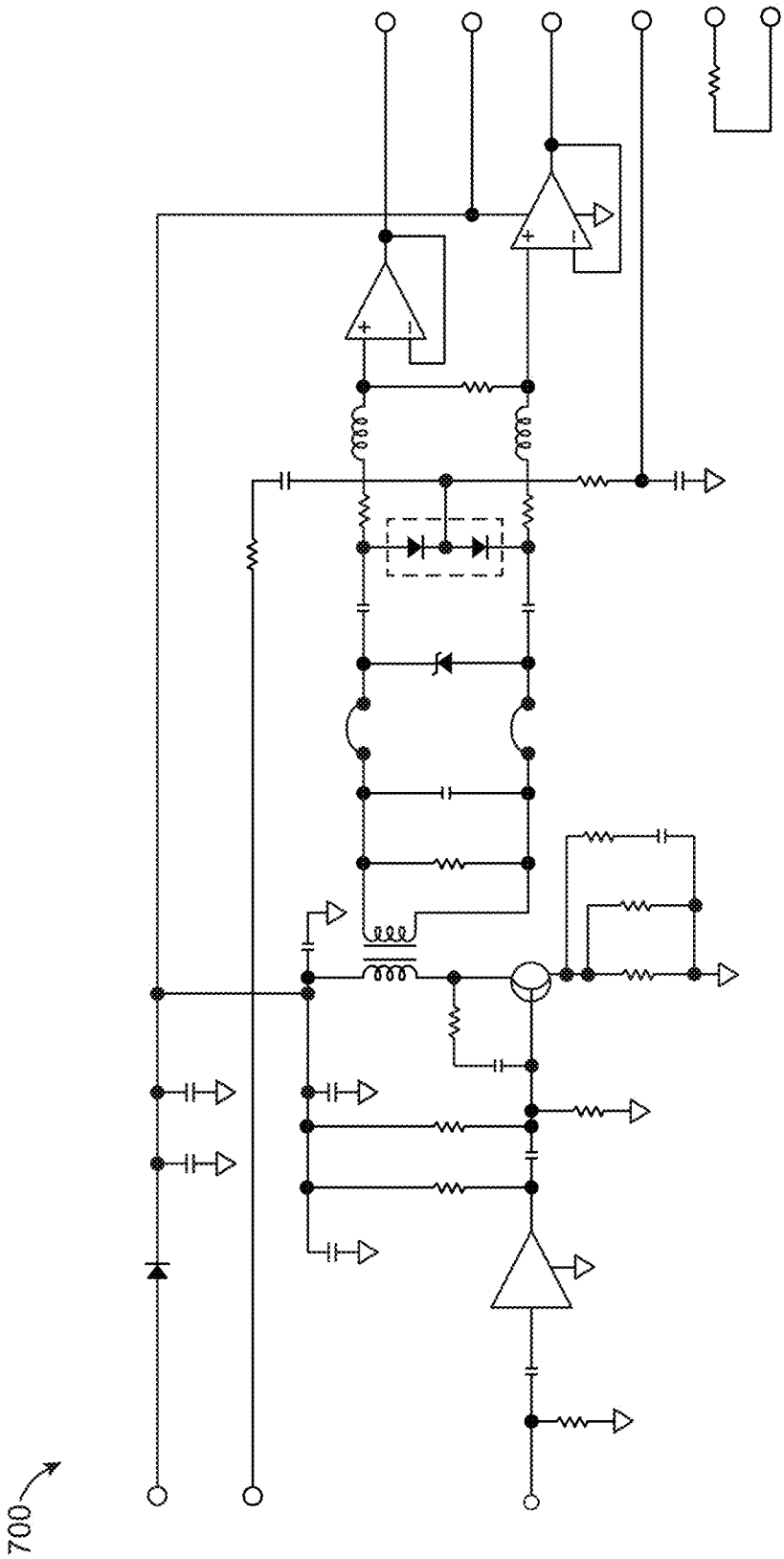

FIG. 7

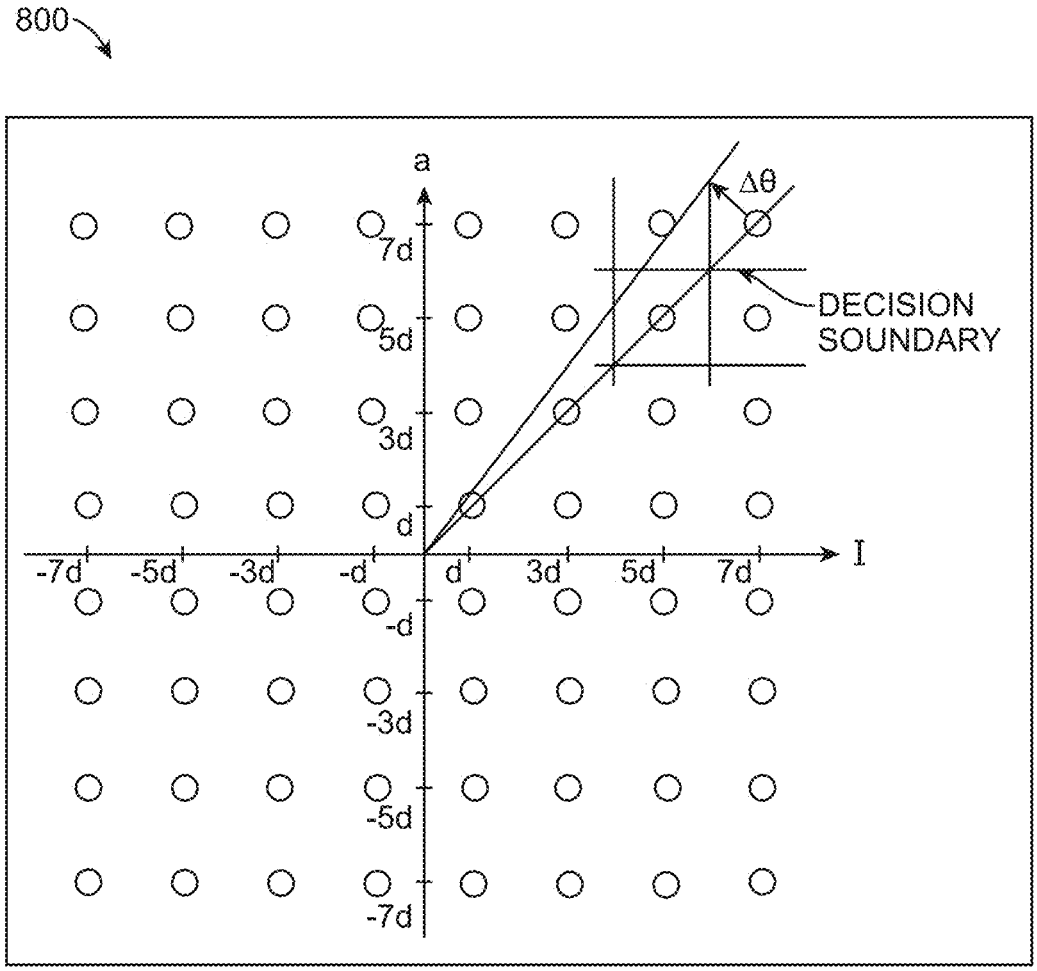
800
a
Δθ
7d
5d
3d
d
-d
-3d
-5d
-7d
-7d
-5d
-3d
-d
d
3d
5d
7d
I
DECISION
SOUNDARY

FIG. 8

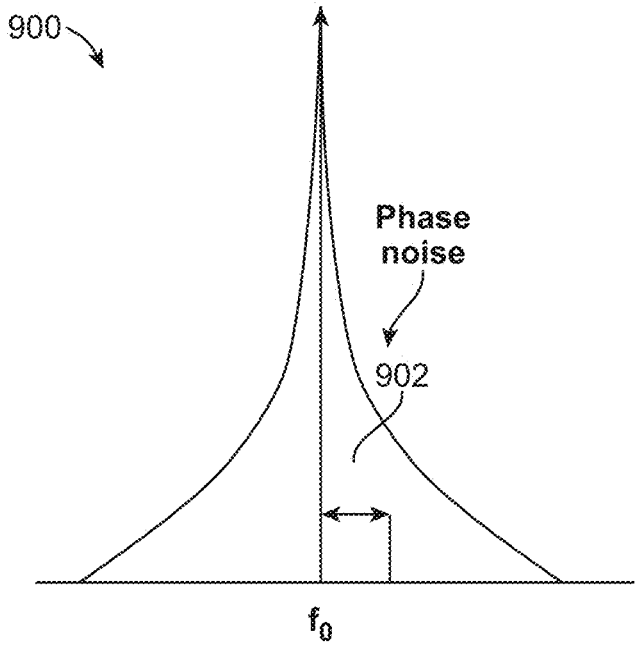
900
Phase
noise
902
f_0

FIG. 9

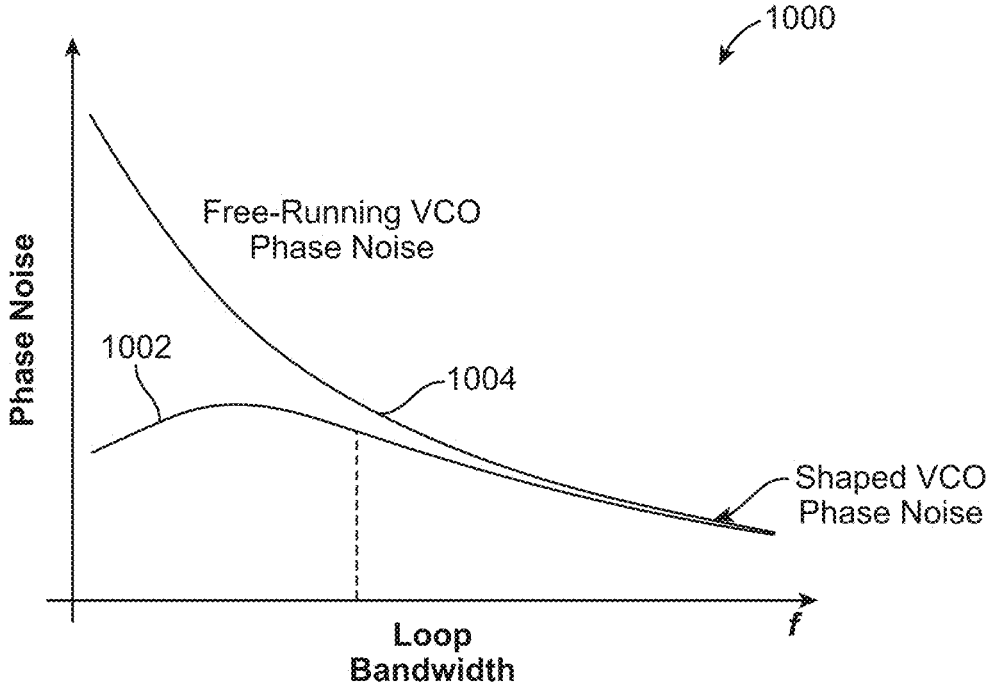
1000
Free-Running VCO
Phase Noise
Phase Noise
1002
1004
Shaped VCO
Phase Noise
Loop
Bandwidth
f

FIG. 10

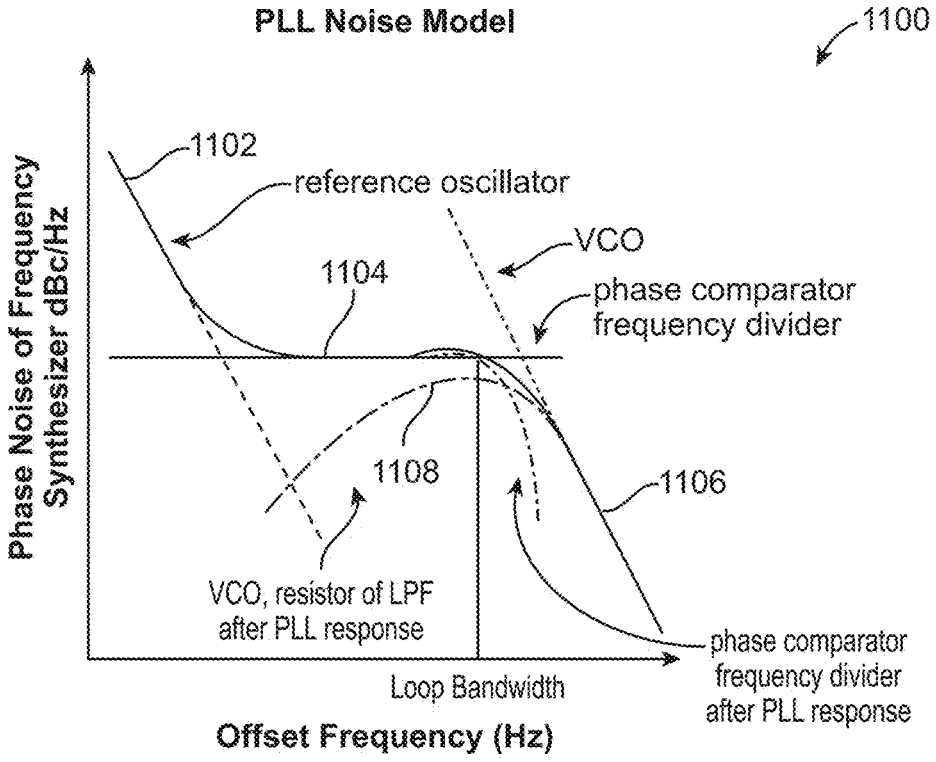
PLL Noise Model
1100
1102
reference oscillator
VCO
1104
phase comparator
frequency divider
1108
1106
VCO, resistor of LPF
after PLL response
phase comparator
frequency divider
after PLL response
Loop Bandwidth
Offset Frequency (Hz)
Phase Noise of Frequency
Synthesizer dBc/Hz

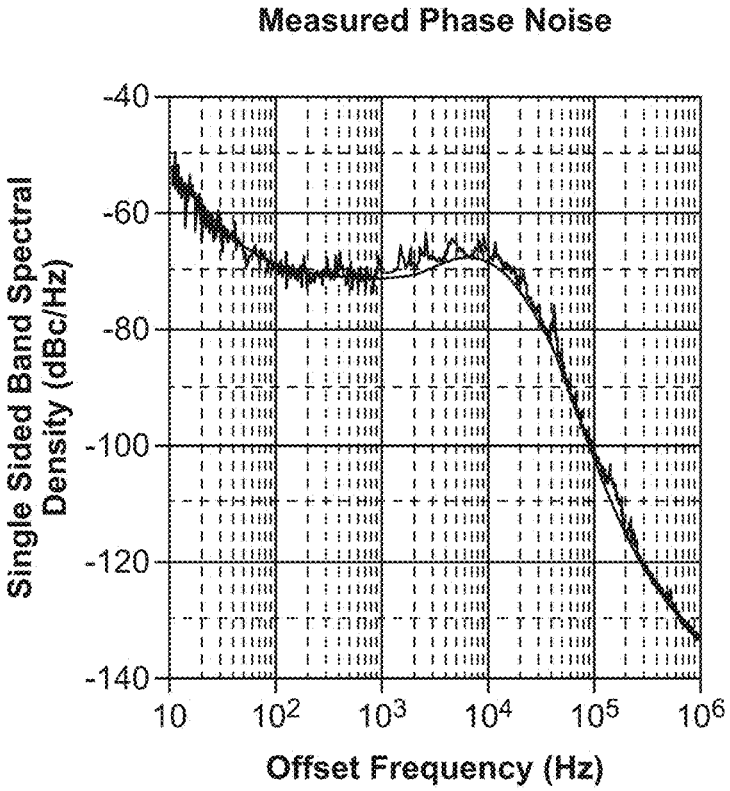
Measured Phase Noise
-40
-60
-80
-100
-120
-140
10
10^2
10^3
10^4
10^5
10^6
Offset Frequency (Hz)
Single Sided Band Spectral
Density (dBc/Hz)

FIG. 11

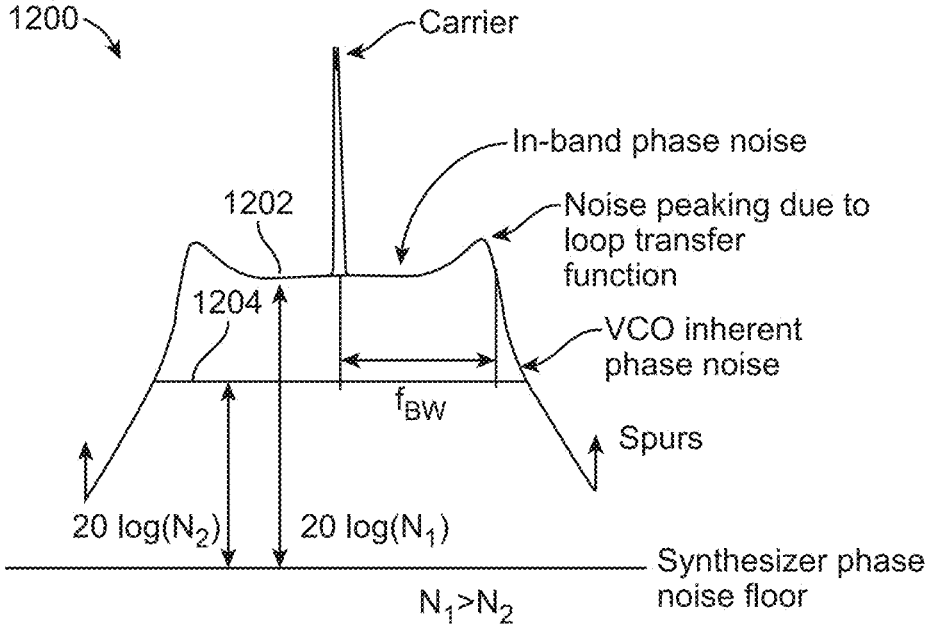
1200
Carrier
In-band phase noise
1202
Noise peaking due to loop transfer function
1204
VCO inherent phase noise
f_{BW}
Spurs
20 log(N_2)
20 log(N_1)
Synthesizer phase noise floor
N_1>N_2

FIG. 12

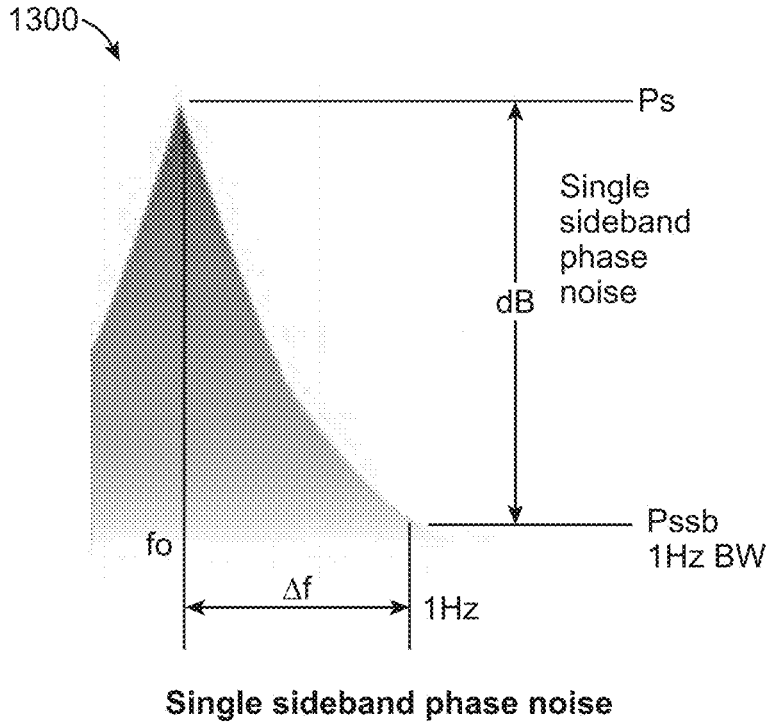
1300
Ps
Single sideband phase noise
dB
Pssb
1Hz BW
fo
Δf
1Hz
Single sideband phase noise

FIG. 13

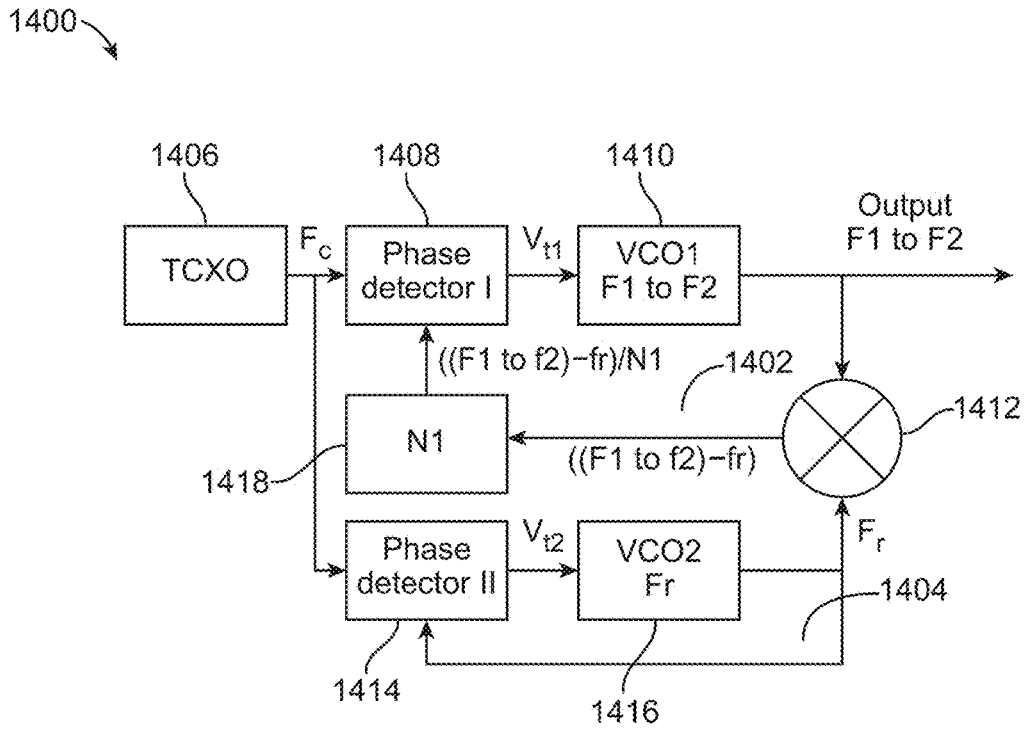
1400
1406
1408
1410
TCXO
F_c
Phase detector I
V_{t1}
VCO1 F1 to F2
Output F1 to F2
((F1 to f2)−fr)/N1
1402
1412
N1
((F1 to f2)−fr)
1418
Phase detector II
V_{t2}
VCO2 Fr
F_r
1404
1414
1416

FIG. 14

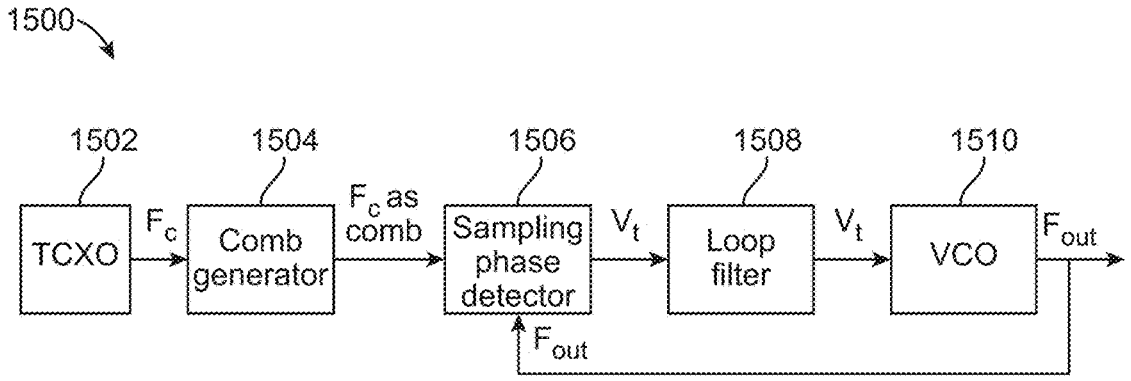
1500
1502
1504
1506
1508
1510
TCXO
F_c
Comb generator
F_c as comb
Sampling phase detector
V_t
Loop filter
V_t
VCO
F_{out}
F_{out}

FIG. 15

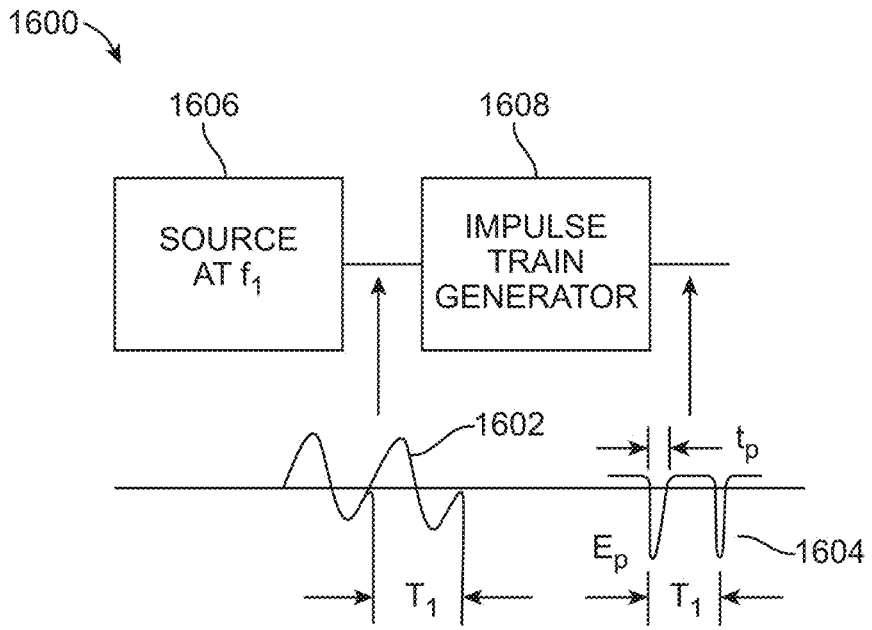
1600
1606
1608
SOURCE AT f_1
IMPULSE TRAIN GENERATOR
1602
t_p
E_p
1604
T_1
T_1

FIG. 16

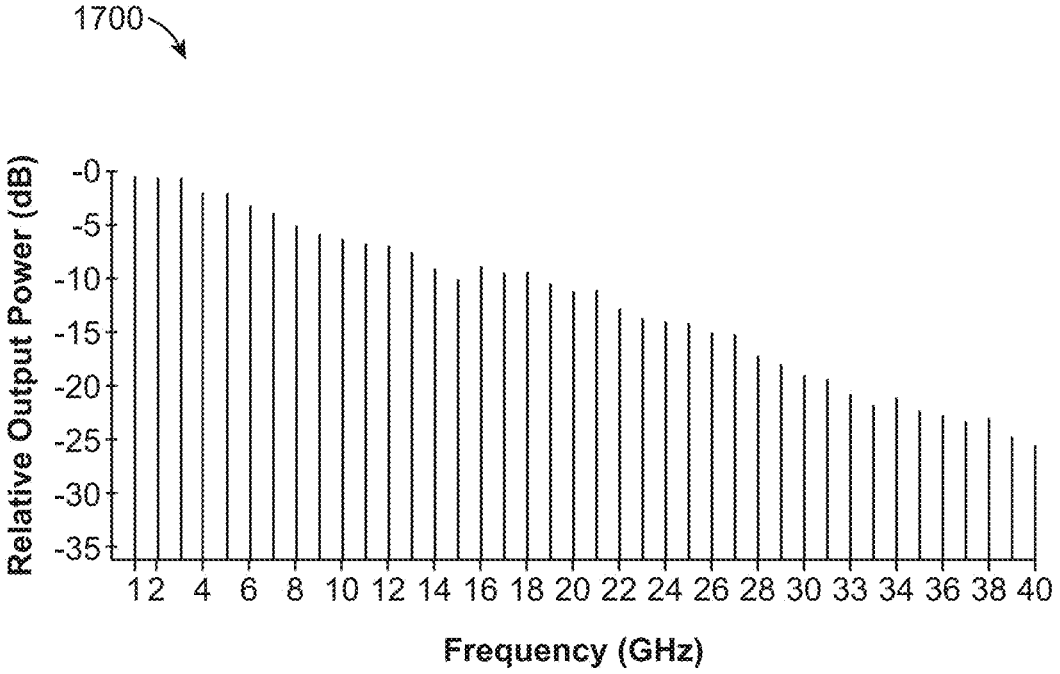
1700
Relative Output Power (dB)
-0
-5
-10
-15
-20
-25
-30
-35
1 2 4 6 8 10 12 14 16 18 20 22 24 26 28 30 33 34 36 38 40
Frequency (GHz)

FIG. 17

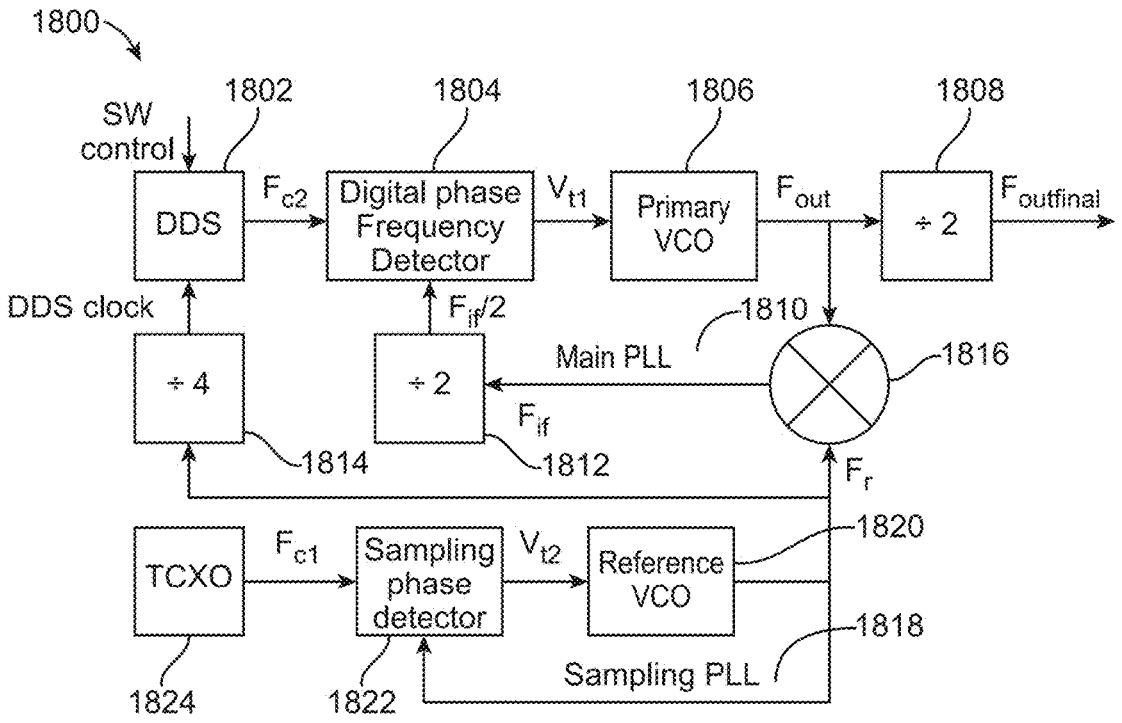
1800
SW control
1802
1804
1806
1808
DDS
F_{c2}
Digital phase Frequency Detector
V_{t1}
Primary VCO
F_{out}
÷ 2
$F_{outfinal}$
DDS clock
$F_{if}/2$
1810
÷ 4
÷ 2
Main PLL
1816
F_{if}
1814
1812
F_r
TCXO
F_{c1}
Sampling phase detector
V_{t2}
Reference VCO
1820
1818
Sampling PLL
1824
1822

FIG. 18

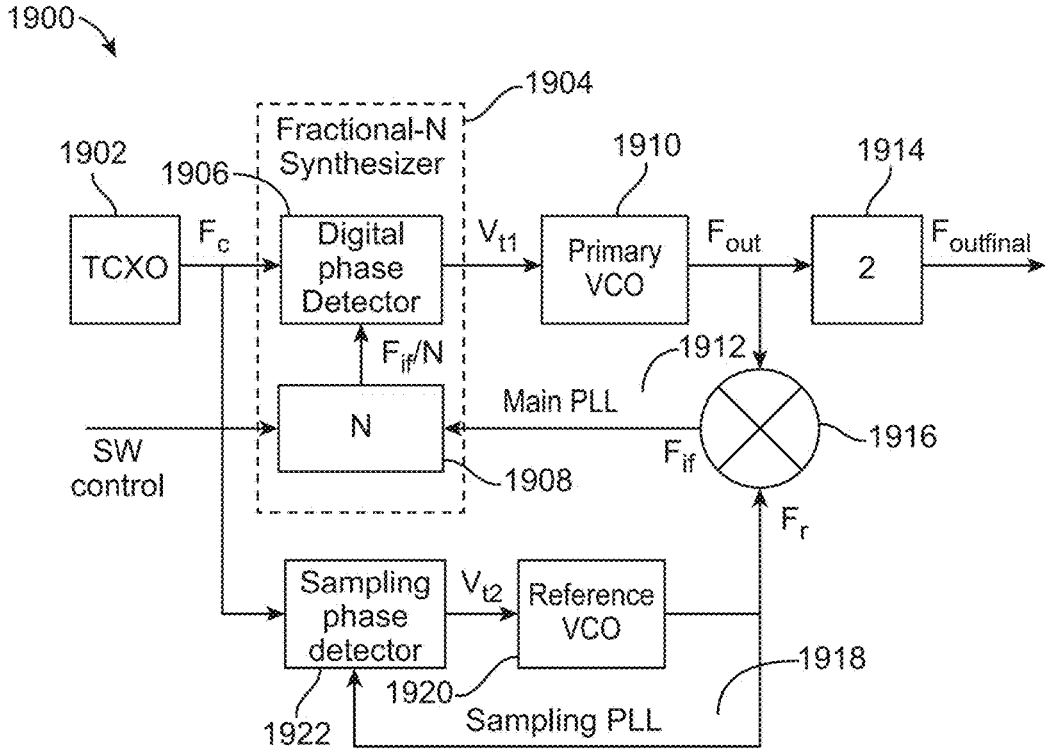
1900
1904
Fractional-N Synthesizer
1902
1906
1910
1914
TCXO
F_c
Digital phase Detector
V_{t1}
Primary VCO
F_{out}
2
$F_{outfinal}$
F_{if}/N
1912
Main PLL
N
1916
SW control
F_{if}
1908
F_r
Sampling phase detector
V_{t2}
Reference VCO
1918
1920
Sampling PLL
1922

FIG. 19

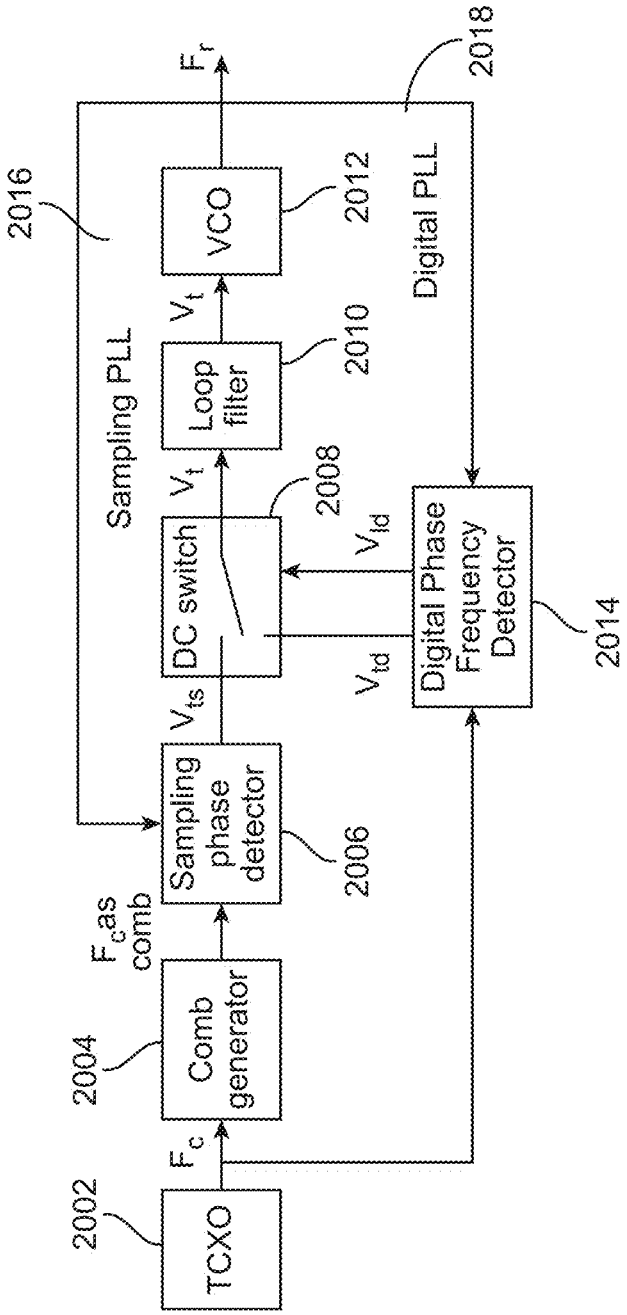
TCXO
2002
F_c
Comb generator
2004
F_c as comb
Sampling phase detector
2006
V_{ts}
DC switch
2008
V_t
Loop filter
2010
V_t
VCO
2012
F_r
Sampling PLL
2016
Digital PLL
2018
V_{td}
V_{td}
Digital Phase Frequency Detector
2014

FIG. 20

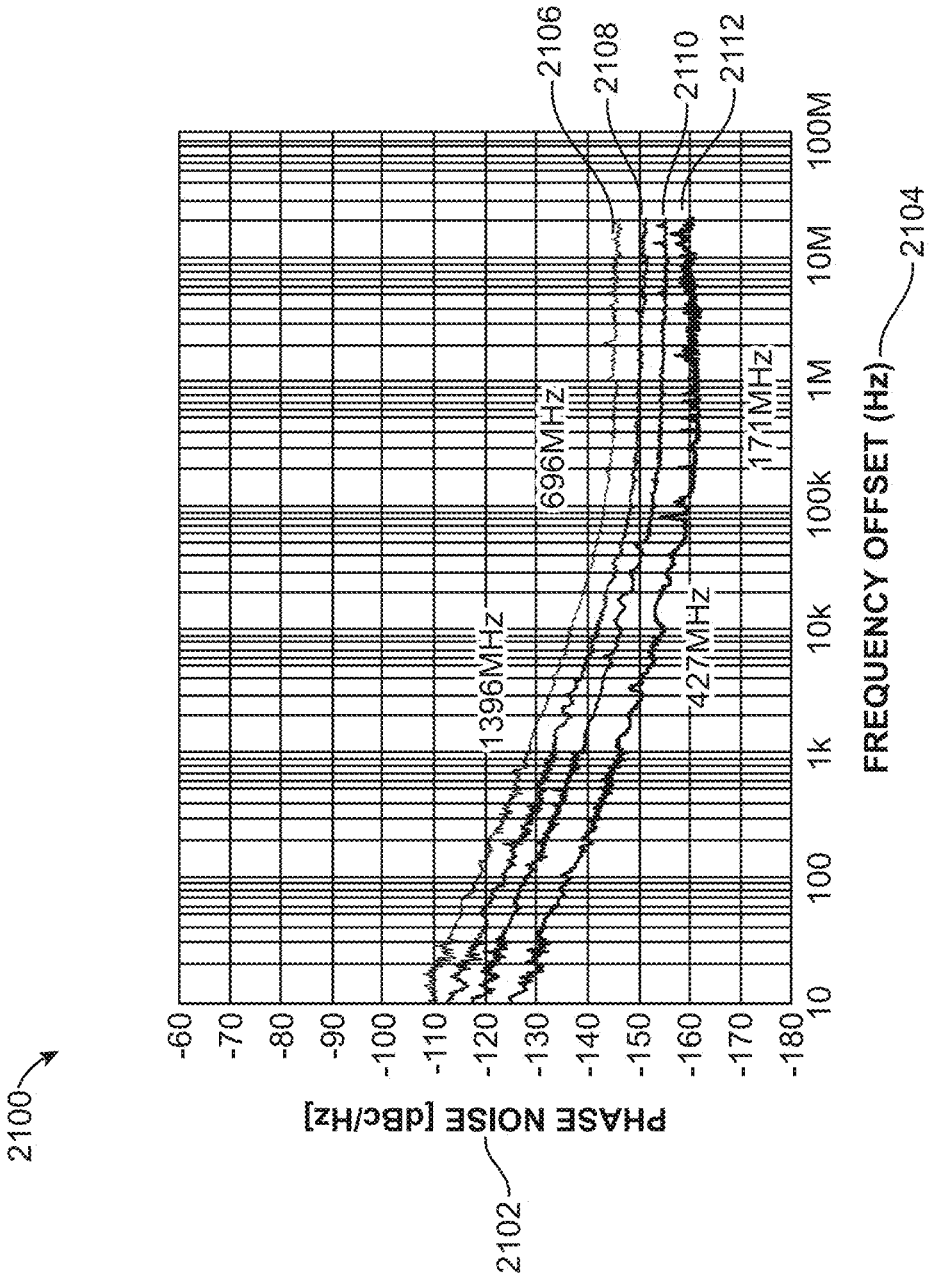
2100
2102
PHASE NOISE [dBc/Hz]
-60
-70
-80
-90
-100
-110
-120
-130
-140
-150
-160
-170
-180
10
100
1k
10k
100k
1M
10M
100M
FREQUENCY OFFSET (Hz)
2104
2106
2108
2110
2112
1396MHz
696MHz
427MHz
171MHz

FIG. 21

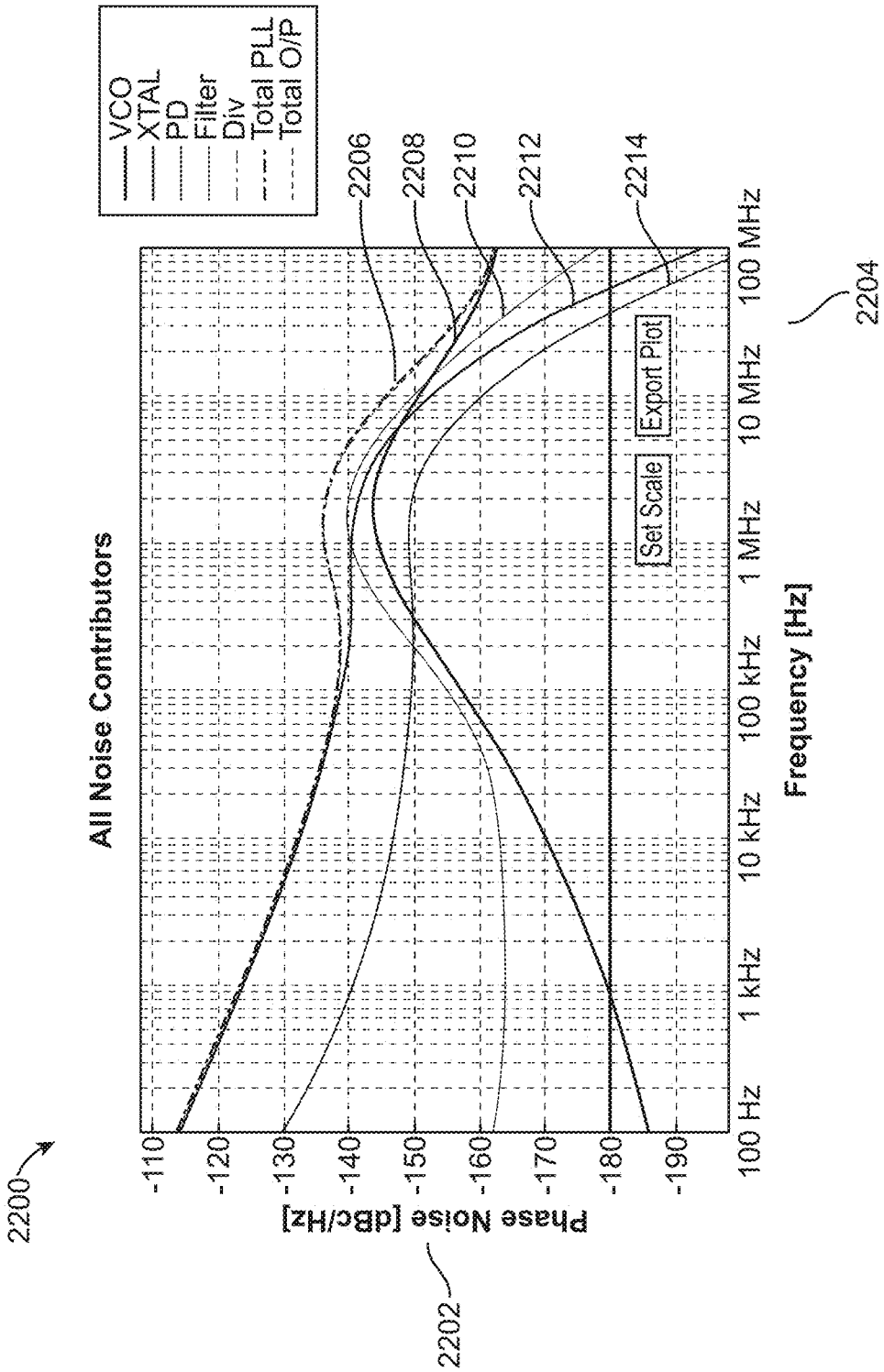
2200
All Noise Contributors
VCO
XTAL
PD
Filter
Div
Total PLL
Total O/P
2206
2208
2210
2212
2214
Set Scale
Export Plot
-110
-120
-130
-140
-150
-160
-170
-180
-190
Phase Noise [dBc/Hz]
2202
100 Hz
1 kHz
10 kHz
100 kHz
1 MHz
10 MHz
100 MHz
Frequency [Hz]
2204

FIG. 22

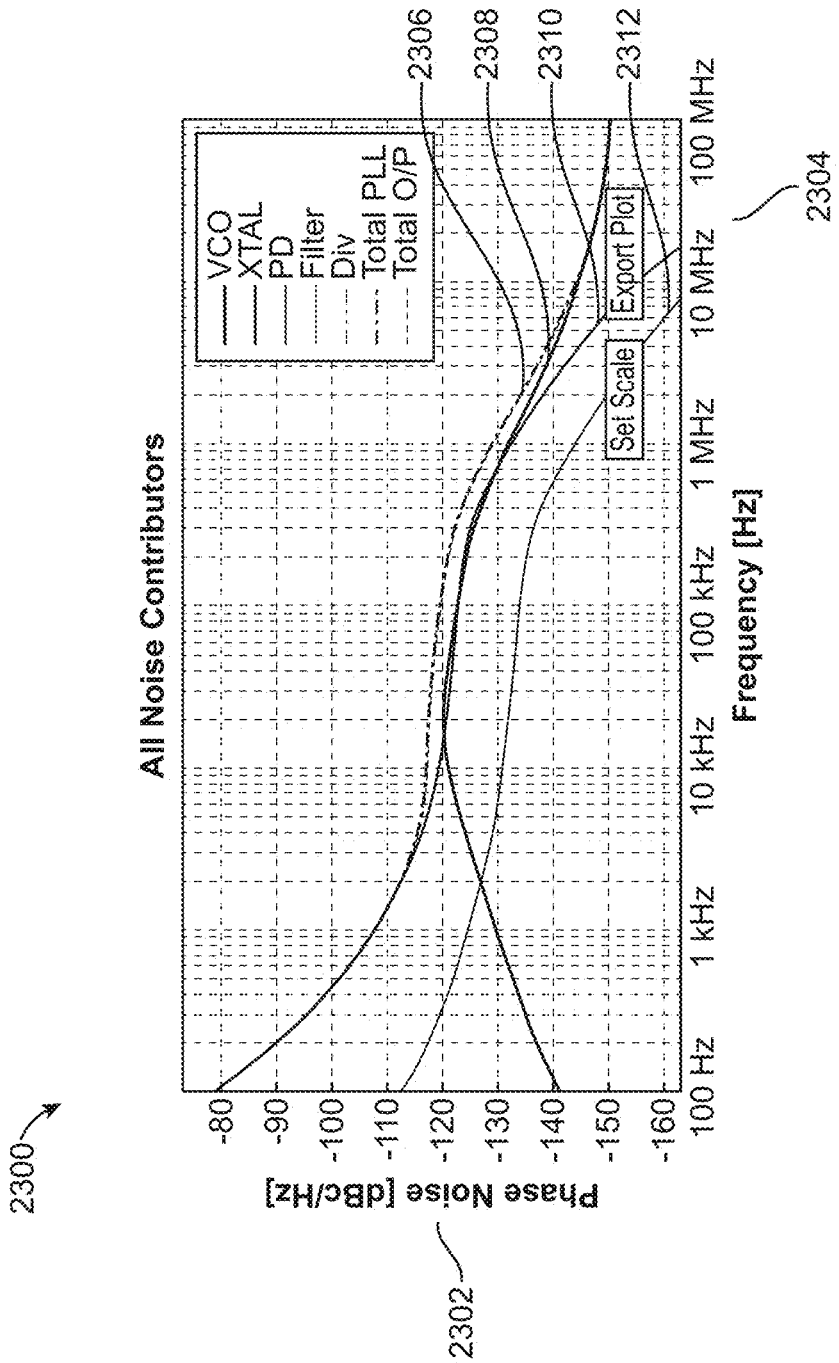
2300
All Noise Contributors
VCO
XTAL
PD
Filter
Div
Total PLL
Total O/P
2306
2308
2310
2312
Sel Scale
Export Plot
2304
-80
-90
-100
-110
-120
-130
-140
-150
-160
Phase Noise [dBc/Hz]
2302
100 Hz
1 kHz
10 kHz
100 kHz
1 MHz
10 MHz
100 MHz
Frequency [Hz]

FIG. 23

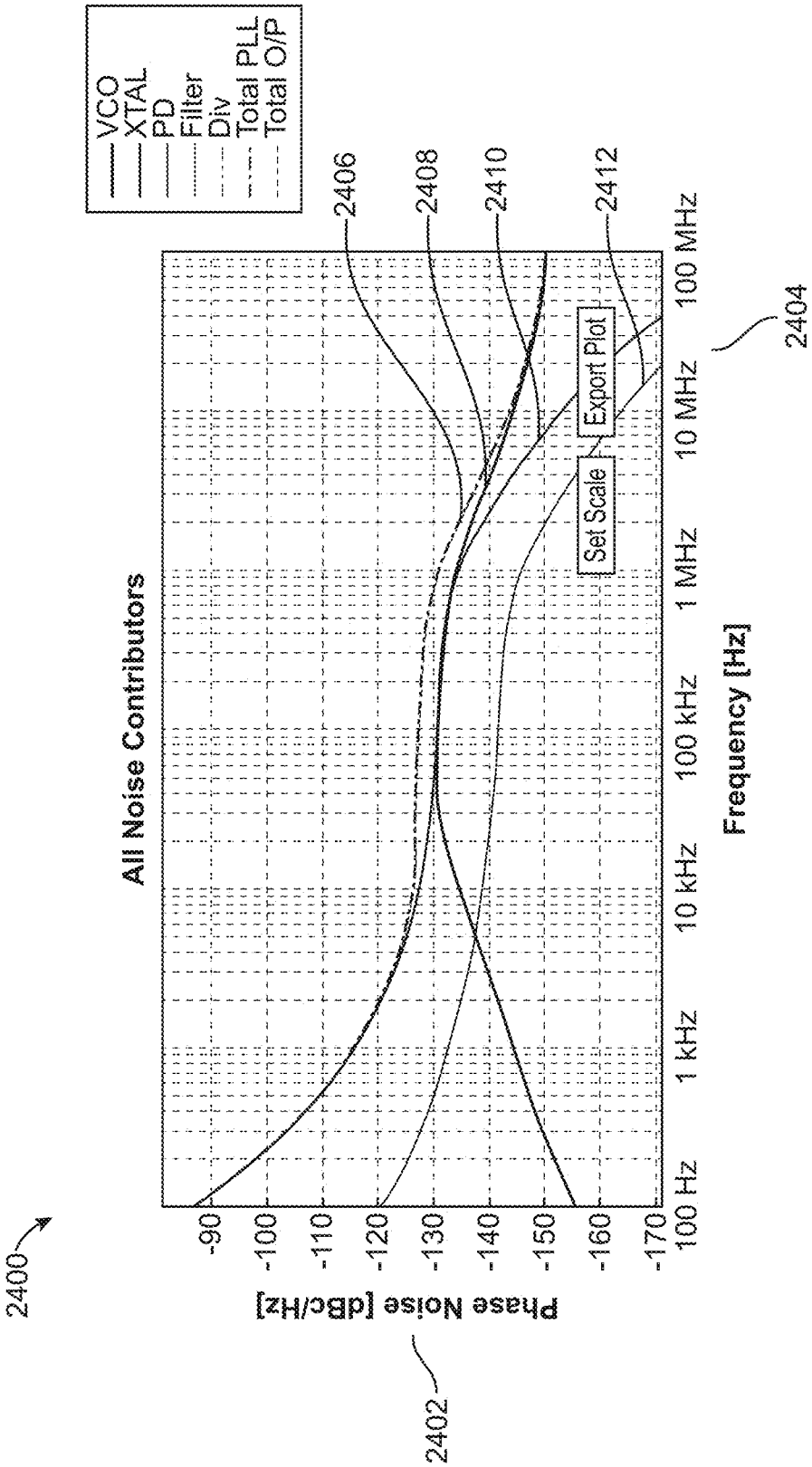
2400
All Noise Contributors
VCO
XTAL
PD
Filter
Div
Total PLL
Total O/P
2406
2408
2410
2412
Set Scale
Export Plot
2404
Phase Noise [dBc/Hz]
-90
-100
-110
-120
-130
-140
-150
-160
-170
100 Hz
1 kHz
10 kHz
100 kHz
1 MHz
10 MHz
100 MHz
Frequency [Hz]
2402

FIG. 24

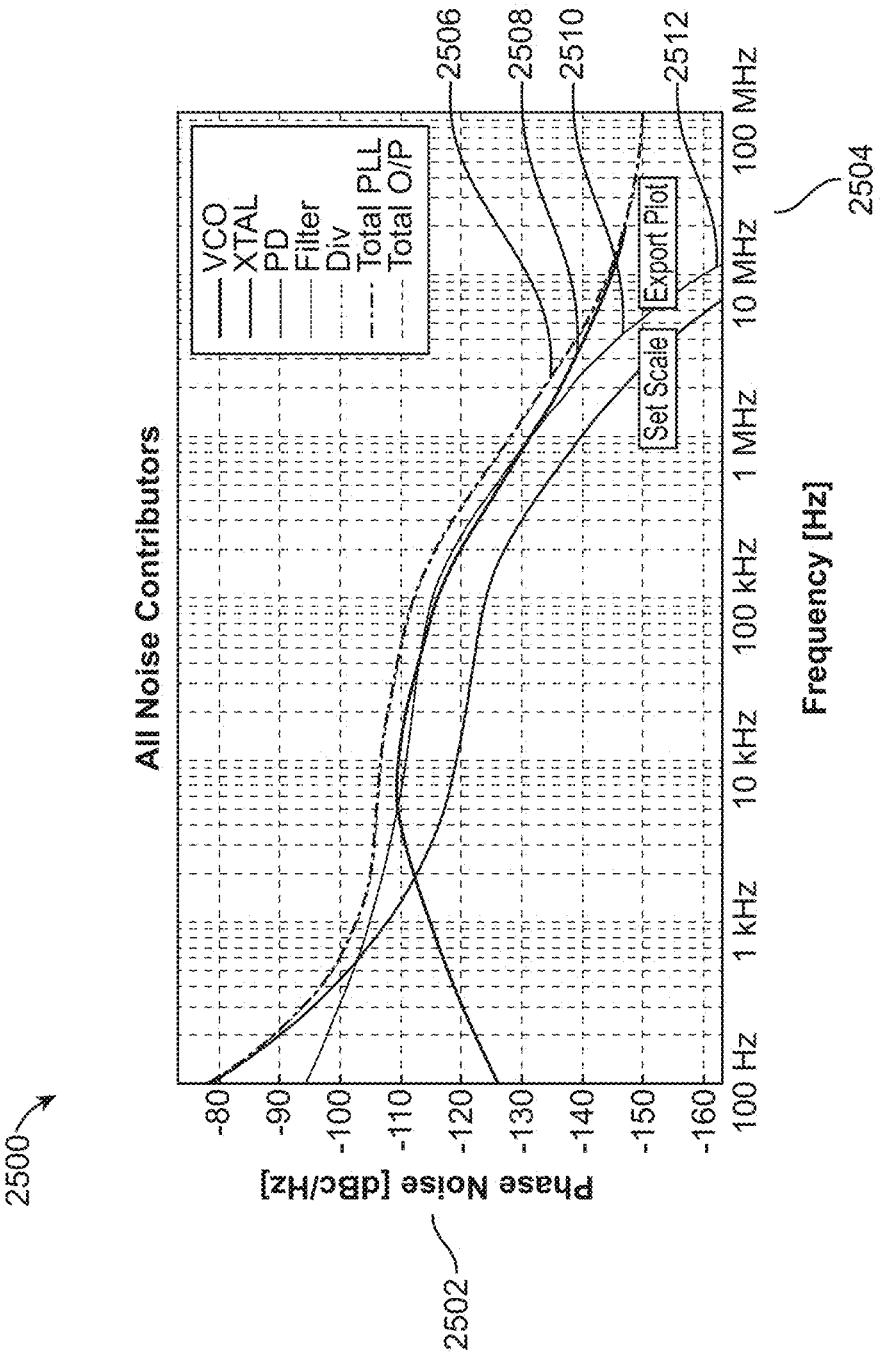
2500
All Noise Contributors
VCO
XTAL
PD
Filter
Div
Total PLL
Total O/P
2506
2508
2510
2512
Set Scale
Export Plot
-80
-90
-100
-110
-120
-130
-140
-150
-160
Phase Noise [dBc/Hz]
2502
100 Hz
1 kHz
10 kHz
100 kHz
1 MHz
10 MHz
100 MHz
Frequency [Hz]
2504

FIG. 25

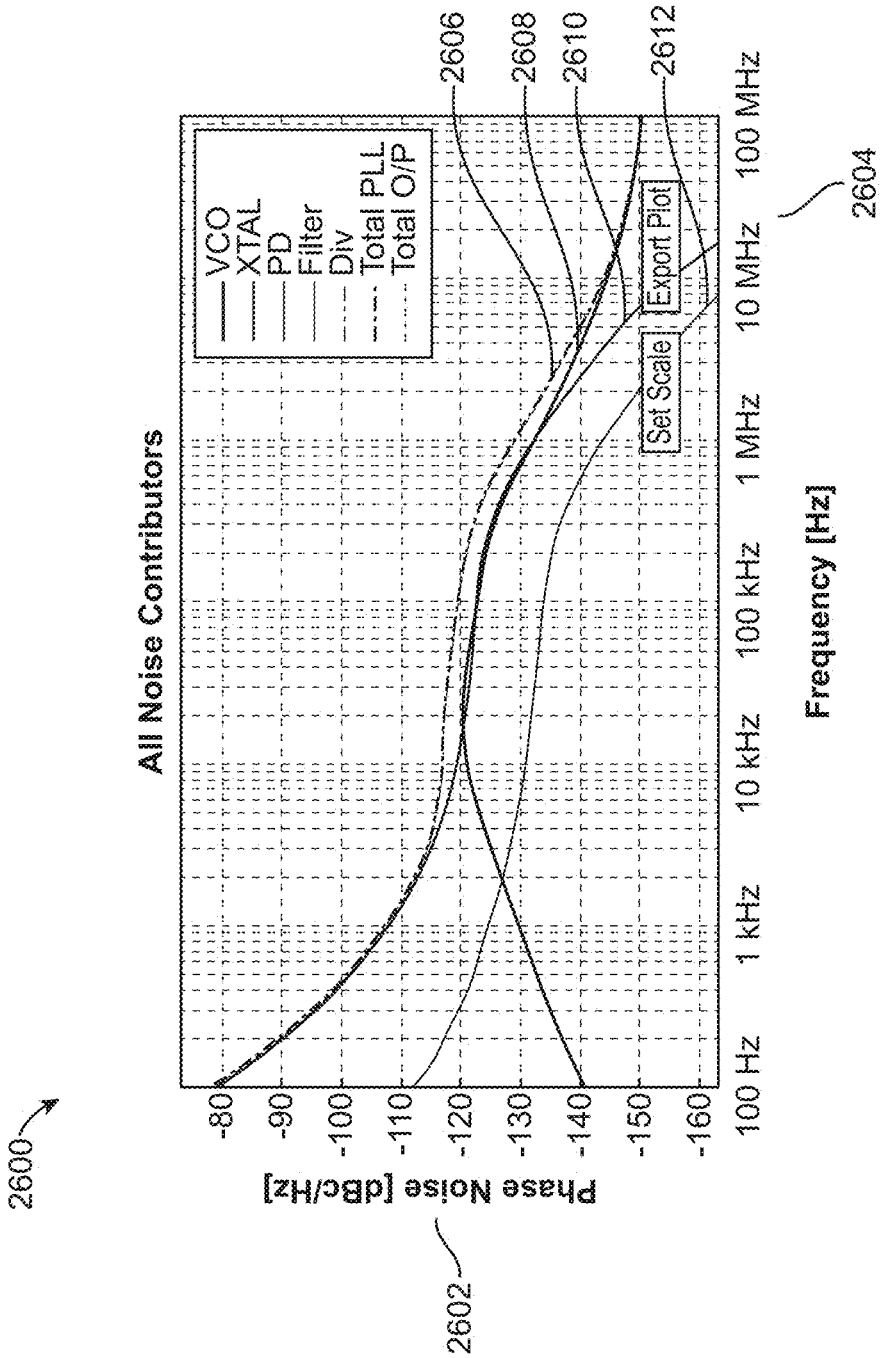
2600
All Noise Contributors
VCO
XTAL
PD
Filter
Div
Total PLL
Total O/P
2606
2608
2610
2612
Set Scale
Export Plot
-80
-90
-100
-110
-120
-130
-140
-150
-160
Phase Noise [dBc/Hz]
2602
100 Hz
1 kHz
10 kHz
100 kHz
1 MHz
10 MHz
100 MHz
Frequency [Hz]
2604

FIG. 26

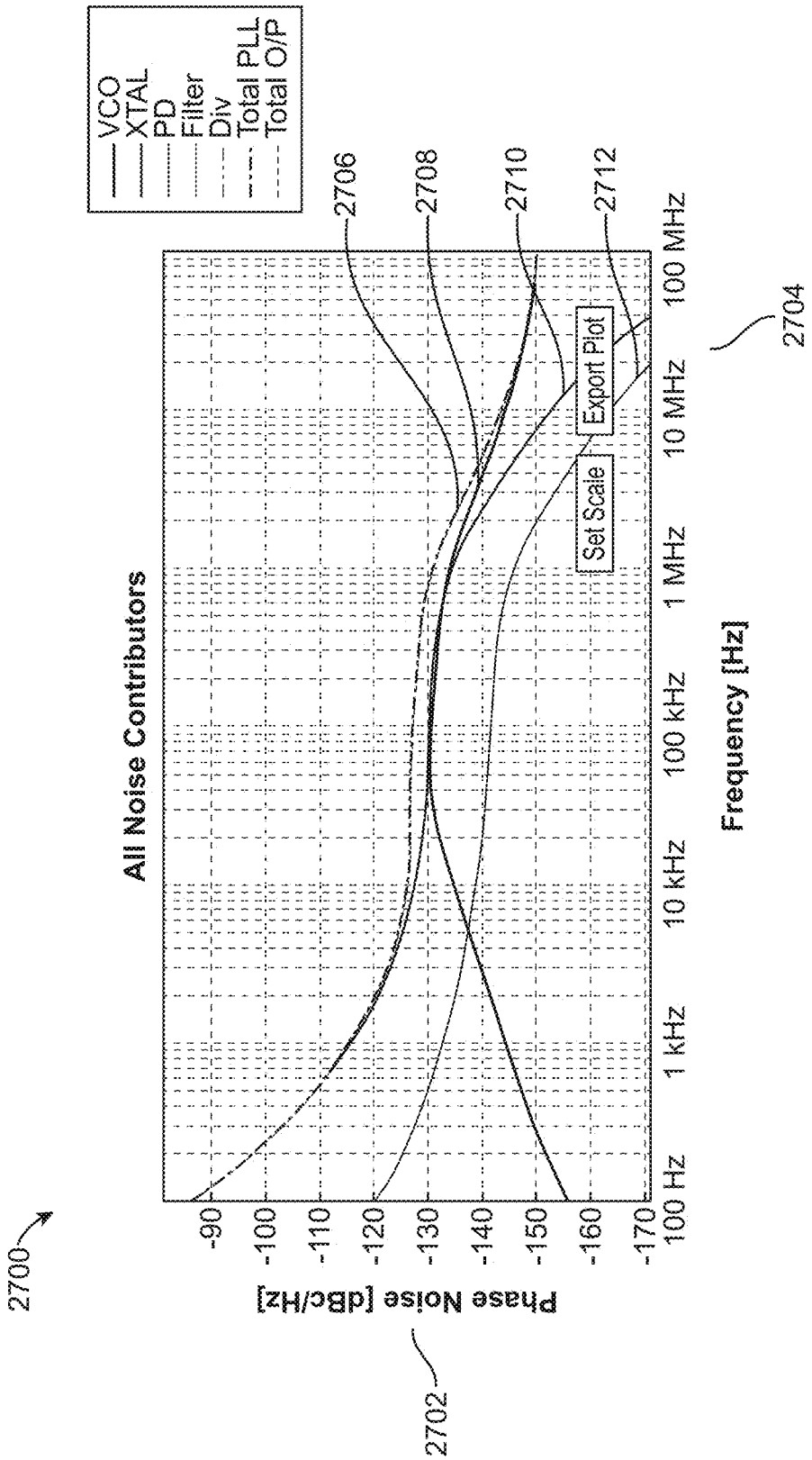
2700
All Noise Contributors
VCO
XTAL
PD
Filter
Div
Total PLL
Total O/P
2706
2708
2710
2712
Set Scale
Export Plot
2704
Phase Noise [dBc/Hz]
-90
-100
-110
-120
-130
-140
-150
-160
-170
100 Hz
1 kHz
10 kHz
100 kHz
1 MHz
10 MHz
100 MHz
Frequency [Hz]
2702

FIG. 27

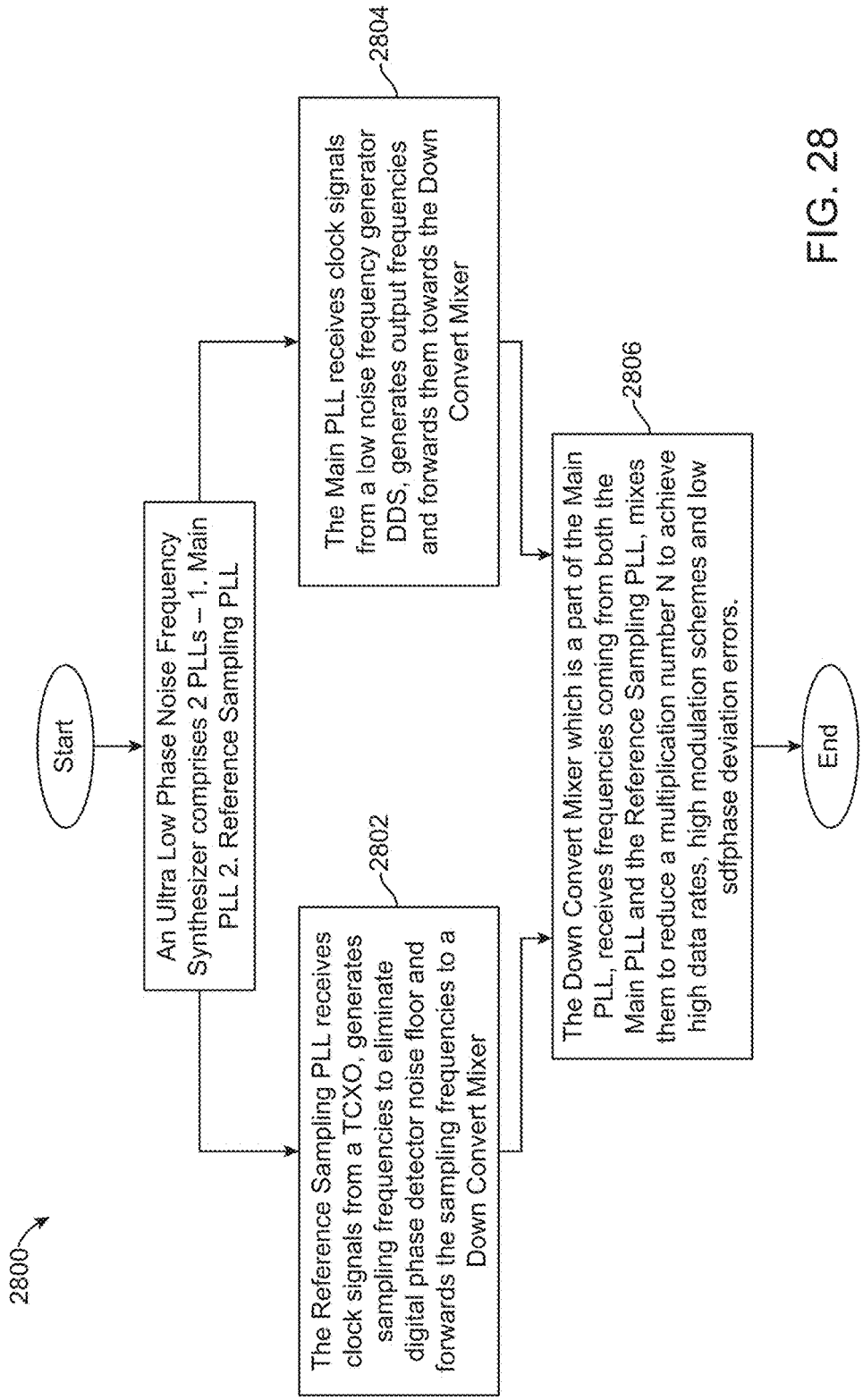
2800
Start
An Ultra Low Phase Noise Frequency Synthesizer comprises 2 PLLs – 1. Main PLL 2. Reference Sampling PLL
2802
The Reference Sampling PLL receives clock signals from a TCXO, generates sampling frequencies to eliminate digital phase detector noise floor and forwards the sampling frequencies to a Down Convert Mixer
2804
The Main PLL receives clock signals from a low noise frequency generator DDS, generates output frequencies and forwards them towards the Down Convert Mixer
2806
The Down Convert Mixer which is a part of the Main PLL, receives frequencies coming from both the Main PLL and the Reference Sampling PLL, mixes them to reduce a multiplication number N to achieve high data rates, high modulation schemes and low sdfphase deviation errors.
End

FIG. 28

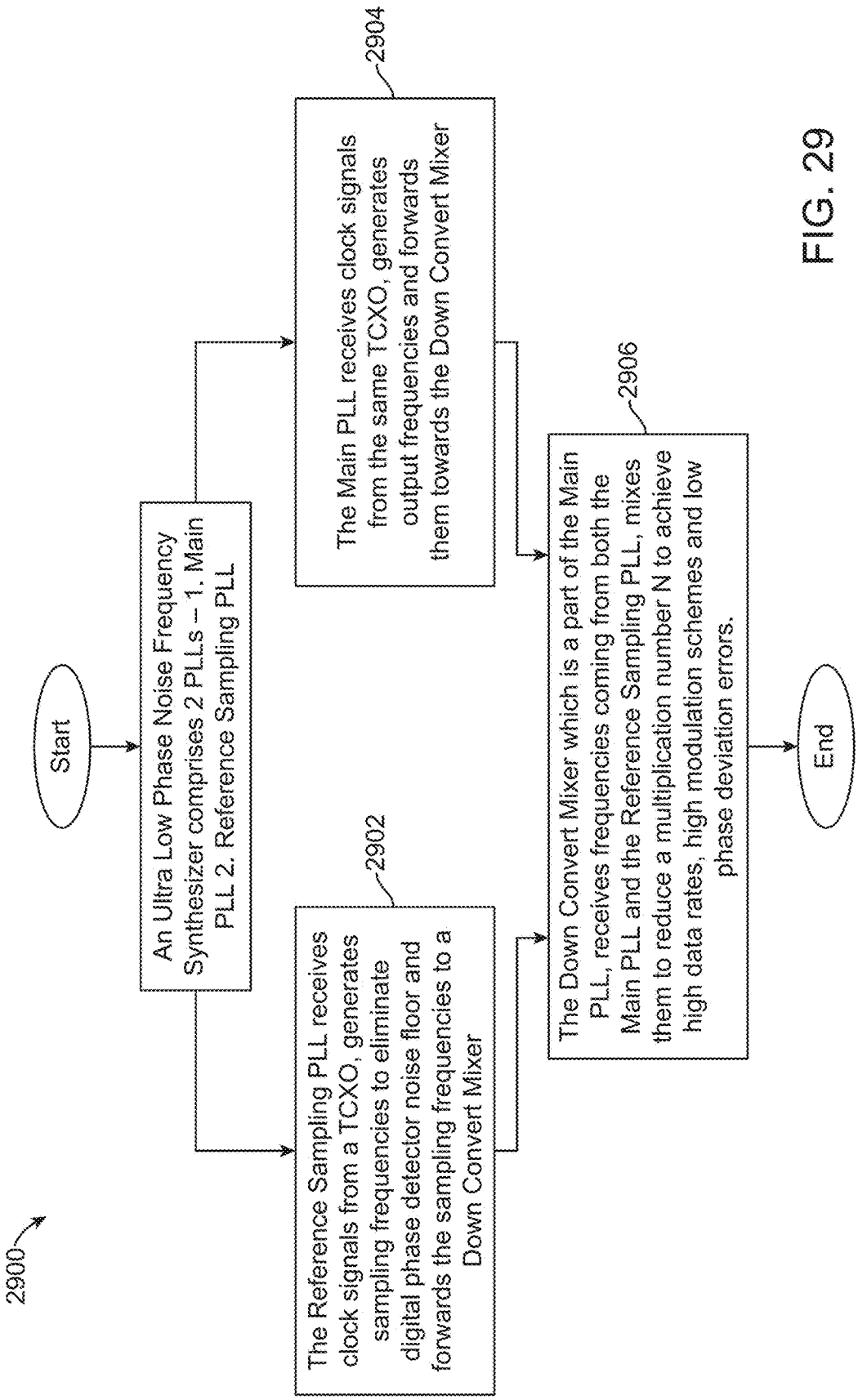
2900
Start
An Ultra Low Phase Noise Frequency Synthesizer comprises 2 PLLs – 1. Main PLL 2. Reference Sampling PLL
2902
The Reference Sampling PLL receives clock signals from a TCXO, generates sampling frequencies to eliminate digital phase detector noise floor and forwards the sampling frequencies to a Down Convert Mixer
2904
The Main PLL receives clock signals from the same TCXO, generates output frequencies and forwards them towards the Down Convert Mixer
2906
The Down Convert Mixer which is a part of the Main PLL, receives frequencies coming from both the Main PLL and the Reference Sampling PLL, mixes them to reduce a multiplication number N to achieve high data rates, high modulation schemes and low phase deviation errors.
End

FIG. 29

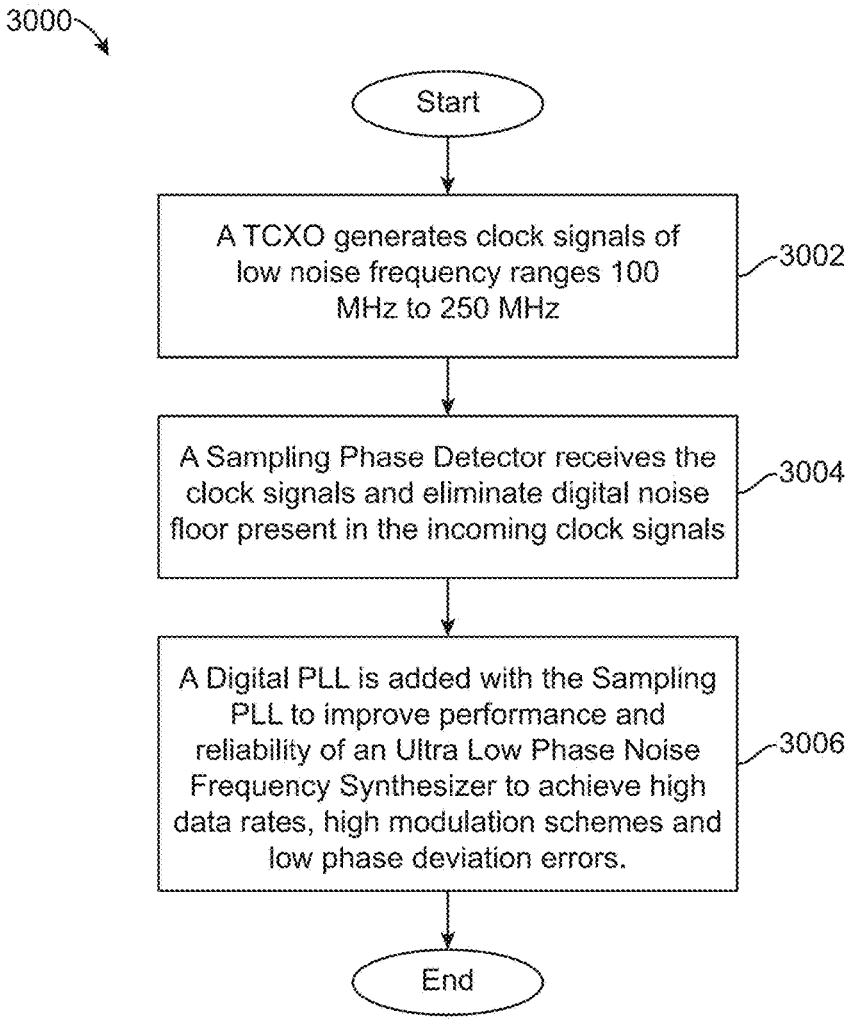
3000
Start
A TCXO generates clock signals of low noise frequency ranges 100 MHz to 250 MHz
3002
A Sampling Phase Detector receives the clock signals and eliminate digital noise floor present in the incoming clock signals
3004
A Digital PLL is added with the Sampling PLL to improve performance and reliability of an Ultra Low Phase Noise Frequency Synthesizer to achieve high data rates, high modulation schemes and low phase deviation errors.
3006
End

FIG. 30

ULTRA LOW PHASE NOISE FREQUENCY SYNTHESIZER

CROSS-REFERENCE TO RELATED APPLICATIONS

This application is a continuation of U.S. application Ser. No. 15/229,915, filed Aug. 5, 2016, which claims priority to U.S. Provisional Patent Application No. 62/181,221 filed on Jun. 18, 2015. The entire disclosure of each of the above applications is incorporated herein by reference.

FIELD

Embodiments of the present disclosure is generally related to systems to provide ultra low phase noise frequency synthesizer and in particular relate to systems to provide ultra low phase noise frequency synthesizer based on using combination of Fractional-N PLL (Phase Lock Loop), Sampling Reference PLL and DDS (Direct Digital Synthesizer).

BACKGROUND

Wireless Communication Technologies have completely revolutionized how millions of peoples in today's world are communicating to each other in a seamless manner. From their early infant days of late 1800's till today the concept of wireless communications have matured beyond our wildest imaginations. Amongst all those technological advances related to the field of wireless communication technologies, the only thing which has remained constant is the application of radio waves. On one hand radio waves can help us achieve communication between people who are located in close proximity of few meters. In the same manner in deep space radio communications those same radio waves can also help us achieve crystal clear communication between humans who are millions of kilometers away from each other.

Wireless Communication Technologies have branched into multiple different formats like Two-Way Radio Communications, Satellite Communications, Infrared Communications, Mobile Communications, Microwave Communications, Wireless Data Communications, Wi-Fi, Bluetooth Technology etc. Each and every single one of the above disclosed wireless communication technologies have evolved tremendously and become much more sophisticated and state of the art. In this patent application we will specifically deal with systems associated with Mobile Communications.

The evolution of mobile communication technologies from their initial 1G (1 Generation) days of 1970 till 2016 which is today's high speed 4G (4 Generation) technologies have enriched human lives in different shapes and sizes. The biggest impact which these gradual evolutions of mobile communication technologies have brought into our lives is the humongous increase in data speed which has enabled seamless communications between millions of peoples. Where 1G technology enabled communication systems used to provide us simple voice communications at only 10 Kbps data rate, the theoretical download data rate of the most advanced mobile communication technologies as of 2016 which is LTE-Advanced (Long Term Evolution) has been proposed as 1 Gbps. This quantum jump in data rate from 10 Kbps to 1 Gbps has left tremendous impact into common peoples' lives.

Without the availability of the advanced state of the art communication systems in today's markets like smart phones, it is not at all possible to access those high speed data rates. One of the most important hardware element present in those state of the art systems like smart phones, are frequency synthesizers. Frequency Synthesizers are a major building block in almost every communication systems, such as advanced mobile communication systems (LTE, LTE-Advanced), satellite communication systems, radar communication systems and so on.

An example frequency synthesizer provides a frequency output signal to other parts of the transmitter and receiver so as to enable the system to operate at the set frequency band. The performance of the frequency synthesizer determines the performance of the communication link. The main important features of every synthesizer are: a) Output frequency range, b) Output frequency resolution, c) Switching speed between channels and d) Spectral purity: Phase noise, spurious and harmonics etc. Amongst all those above mentioned features phase noise is the most important. The level of phase noise determines the modulation scheme that can be implemented in the system hardware and thus it determines the associated data rates and the communication ranges of the systems.

If a communication system provides higher data rate the system is more efficient, and it takes less time to download and upload data from the network. A higher data transfer rate can even save battery time because the transmission can be turned off much faster. A higher order modulation scheme implemented in the state of the art communication systems enables those systems to push more information in the wireless channels. However, the modulation scheme is limited by phase noise. Hence to implement those higher modulation schemes in the existing state of the art communication systems we need to reduce the phase noise.

Most modern communication systems use sophisticated modulation schemes that are based on a combination of different phases and amplitudes. The current most advanced modulation scheme which is running in most of the smart phones or tablets is 256 QAM (256 Quadrature Amplitude Modulation). In this modulation scheme, the smallest phase deviation for error ($\Delta\phi$) theoretically is 3.7°. Practically, to be on the safe side, it is desired to work with nicely lower number. As 10% is considered safe, hence the current generation of frequency synthesizers work with 0.4°-0.5°. The current generation of single loop frequency synthesizers inherently does not enable to go to much lower phase error due to phase noise.

The current generation of advanced state of the art communication systems typically includes a front end module and a System on Chip (SoC). The frequency synthesizer is part of the SoC and is implemented mostly in CMOS. The front end module usually contains a low noise amplifier for the receiver, the power amplifier for the transmitter and some switch matrix. The SoC includes all the signal processing elements along with the frequency synthesizers. Currently the Wi-Fi and/or LTE synthesizers in the SoC set the limit for the performance of the system. As a result, the multi-billion dollar market remains at a technological standstill.

Further, in many communication systems, Digital Pre-Distortion (DPD) is an algorithm that aims to pre-distort transmitted signals in order to improve linearity. In practical terms, it means that the transmitter is not completely linear and is distorting the signal. And that basically also prevents the system to be as effective as much as possible. So one approach is to correct it is by using some algorithms to pre

distort the signal in the opposite way. To do this efficiently, the DPD algorithm requires the amplitude and phase data about the transmitted data.

Traditional radio systems either utilize the receive path of the radio or a special down-conversion mechanism followed by a high-resolution analog to digital converter to capture the small non-linearities of the transmit path. The main problem with the above mechanism is that non-linearities and phase noise of the receive path or special down-conversion path get added to the signal and the DPD algorithm cannot separate the non-linearities and the phase noise generated and added during the down-conversion from the ones that were actually created in the transmit path and need correction.

The transmit path nonlinearities; can come from any component such as low frequency amplifier, mixer, up-converter, driver amplifier. Specifically the Power Amplifier (PA) is the main source of nonlinear distortions in the transmit path and the main goal of the DPD algorithm is to pre-distort this to achieve a cleaner signal. As mentioned above all the receive path nonlinearities are added to the transmit path with no way to distinguish between the two.

Hence, there is a need for a low phase noise frequency synthesizer that can overcome the problems of prior art, enable higher modulation schemes and high data rate by reducing phase noise, resolve the locking problem in the sampling PLLs and minimize DPD distortions in received signals. The target of the present disclosure is to enable much lower level of phase deviation for error ($\Delta\phi$) which should be in the range of 10% of current designs, or 0.04° and thus enables much higher order modulation schemes and enables an efficient DPD algorithm.

SUMMARY

The present disclosure is discussed in reference to state of the art wireless communication systems (smart phones) for exemplary purposes only. It is contemplated that the present disclosure is applicable to any state of the art wireless communication systems which enables consumers to communicate with each other in a seamless manner.

According to a first embodiment of the present disclosure a system comprising one ultra low phase noise frequency synthesizer is provided. The system is made up with a front end module, a display screen and one System on Chip (SoC) module. The ultra low phase noise frequency synthesizer is part of the SoC module. The ultra low phase noise frequency synthesizer comprises one main PLL (Phase Lock Loop) and one reference sampling PLL. The main PLL comprises one high frequency DDS (Direct Digital Synthesizer), one Digital Phase Frequency Detector, one main VCO (Voltage Controlled Oscillator), one frequency divider and one down convert mixer. The reference sampling PLL comprises one TCXO (Temperature Compensated Crystal Oscillator), one sampling phase detector, and one reference VCO. This embodiment provides multiple improvements in system output which are based on the following technical approaches—a) using of dual loop approach to reduce frequency multiplication number, b) using of sampling PLL as the reference PLL to make its noise contribution negligible, c) using of DDS to provide high frequency input to the main PLL and d) using of high frequency Digital Phase Frequency Detector in the main PLL.

According to a second embodiment of the present disclosure a system comprising one ultra low phase noise frequency synthesizer is provided. The system is made up with a front end module, a display screen and one System on Chip (SoC) module. The ultra low phase noise frequency synthesizer is part of the SoC module. The ultra low phase noise frequency synthesizer comprises one main PLL (Phase Lock Loop) and one reference sampling PLL. The ultra low phase noise frequency synthesizer comprises one single TCXO (Temperature Compensated Crystal Oscillator) which provides input clock signals to both the main PLL and the reference sampling PLL. The main PLL further comprises one Fractional-N Synthesizer chip, one primary VCO (Voltage Controlled Oscillator) and one down convert mixer. The Fractional-N Synthesizer chip includes one Digital Phase Detector and one software controllable variable frequency divider. The reference sampling PLL comprises one sampling PLL, and one reference VCO. This embodiment provides multiple improvements in system output which are based on the following technical approaches—a) using of dual loop approach to reduce frequency multiplication number, b) using of sampling PLL to make its noise contribution negligible, c) instead of a DDS clock like in the previous embodiment, using of a high frequency TCXO clock to provide high frequency input to the main PLL, and d) using of a high frequency Fractional-N Synthesizer chip in the main PLL.

According to a third embodiment of the present disclosure a system comprising one ultra low phase noise frequency synthesizer is provided. The system is made up with a front end module, a display screen and one System on Chip (SoC) module. The ultra low phase noise frequency synthesizer is part of the SoC module. The system comprises one sampling PLL (Phase Lock Loop), which is one of the most important building blocks of an ultra low phase noise frequency synthesizer. The sampling PLL comprises one TCXO (Temperature Compensated Crystal Oscillator), one Comb Generator, one Sampling Phase Detector, one DC switch, one Loop Filter, one VCO (Voltage Controlled Oscillator) and one Digital Synthesizer. In this embodiment, the loop filter is just a loop filter. The Digital Synthesizer acts as a phase detector when the loop is locked and as a frequency detector when the loop is open, forcing the loop to lock from any distance between the two frequencies. The loop will lock by the Digital Synthesizer. Once it is locked, the lock indicator will switch the PLL to the sampling PLL while keeping the same control voltage, thus keeping the loop locked.

The preceding is a simplified summary to provide an understanding of some aspects of embodiments of the present disclosure. This summary is neither an extensive nor exhaustive overview of the present disclosure and its various embodiments. The summary presents selected concepts of the embodiments of the present disclosure in a simplified form as an introduction to the more detailed description presented below. As will be appreciated, other embodiments of the present disclosure are possible utilizing, alone or in combination, one or more of the features set forth above or described in detail below.

BRIEF DESCRIPTION OF THE DRAWINGS

The above and still further features and advantages of embodiments of the present invention will become apparent upon consideration of the following detailed description of embodiments thereof, especially when taken in conjunction with the accompanying drawings, and wherein:

FIG. **1** illustrates a general block diagram of a negative feedback system;

FIG. **2** illustrates a general block diagram of a standard Phase Lock Loop (PLL);

FIG. **3** illustrates a simplified drawing of a digital phase/frequency detector;

FIG. **4** illustrates an example of an active filter as applied to a general PLL;

FIG. **5** illustrates the principle of sample-and-hold mechanism;

FIG. **6** illustrates a schematic of the step recovery diode as comb generator feeding the dual schottky diode that acts as phase detector;

FIG. **7** illustrates a complete example schematic of the comb generator and sampling phase detector with RF preamplifier and two DC buffers following the phase detector;

FIG. **8** illustrates a 64 QAM modulation scheme used in communication equipment;

FIG. **9** illustrates a phase noise plot of an example free running Voltage Control Oscillator (VCO) in the frequency domain (spectrum analyzer), without being locked in a PLL;

FIG. **10** illustrates a phase noise plot of an example Voltage Control Oscillator (VCO) in the frequency domain (spectrum analyzer), compensated by being locked in a PLL;

FIG. **11** illustrates two plots: (a) a simulation of phase noise of an example PLL, and (b) is an actual measurement;

FIG. **12** illustrates a phase noise plot of a closed loop PLL, showing clearly the effect of the phase detector multiplication number 20*LOG(N) within loop bandwidth;

FIG. **13** illustrates a plot of measurement terms of phase noise in 1 Hz bandwidth at a Δf offset frequency from the carrier.

FIG. **14** illustrates a general block diagram of an example dual loop PLL;

FIG. **15** illustrates a general block diagram of an example dual sampling PLL;

FIG. **16** illustrates how impulse or "comb" generator changes a wave shape of a signal from sine wave to pulses;

FIG. **17** illustrates an example output of a comb generator in the frequency domain;

FIG. **18** illustrates a block diagram of an ultra-low phase noise frequency synthesizer as suggested in a first embodiment;

FIG. **19** illustrates a block diagram of an ultra-low phase noise frequency synthesizer as suggested in a second embodiment;

FIG. **20** illustrates a block diagram of the sampling PLL system as suggested in a third embodiment;

FIG. **21** illustrates a phase noise simulation plot contributed by a DDS chip in accordance with the first embodiment of the present disclosure;

FIG. **22** illustrates a phase noise simulation plot contributed by a main PLL in accordance with the first embodiment of the present disclosure;

FIG. **23** illustrates a phase noise simulation plot contributed by a reference sampling PLL having the TCXO clock generating input frequencies of 100 MHz in accordance with the first embodiment of the present disclosure;

FIG. **24** illustrates a phase noise simulation plot contributed by a reference sampling PLL having the TCXO clock generating input frequencies of 250 MHz in accordance with the first embodiment of the present disclosure;

FIG. **25** illustrates a phase noise simulation plot contributed by a main PLL in accordance with the second embodiment of the present disclosure;

FIG. **26** illustrates a phase noise simulation plot contributed by a reference sampling PLL having the TCXO clock generating input frequencies of 100 MHz in accordance with the second embodiment of the present disclosure;

FIG. **27** illustrates a phase noise simulation plot contributed by a reference sampling PLL having the TCXO clock generating input frequencies of 250 MHz in accordance with the second embodiment of the present disclosure;

FIG. **28** illustrates a flow chart depicting the operational method steps of the first embodiment;

FIG. **29** illustrates a flow chart depicting the operational method steps of the second embodiment; and

FIG. **30** illustrates a flow chart depicting the operational method steps of the third embodiment.

To facilitate understanding, like reference numerals have been used, where possible, to designate like elements common to the figures.

DETAILED DESCRIPTION

As used throughout this application, the word "may" is used in a permissive sense (i.e., meaning having the potential to), rather than the mandatory sense (i.e., meaning must). Similarly, the words "include", "including", and "includes" mean including but not limited to.

The phrases at least one", one or more", and "and/or" are open-ended expressions that are both conjunctive and disjunctive in operation. For example, each of the expressions at least one of A, B and C", at least one of A, B, or C", one or more of A, B, and C", one or more of A, B, or C" and "A, B, and/or C" means A alone, B alone, C alone, A and B together, A and C together, B and C together, or A, B and C together.

The term "a" or "an" entity refers to one or more of that entity. As such, the terms "a" (or "an"), "one or more" and "at least one" can be used interchangeably herein. It is also to be noted that the terms "comprising", "including", and "having" can be used interchangeably.

The term "automatic" and variations thereof, as used herein, refers to any process or operation done without material human input when the process or operation is performed. However, a process or operation can be automatic, even though performance of the process or operation uses material or immaterial human input, if the input is received before performance of the process or operation. Human input is deemed to be material if such input influences how the process or operation will be performed. Human input that consents to the performance of the process or operation is not deemed to be "material".

FIG. **1** illustrates a general block diagram of a negative feedback system **100**.

The negative feedback system **100** has an input R and an output C, a summer/comparator **102**, a forward path function G **104** and a feedback path function H **106**. The summer/comparator **102** compares the input R with a sample B of the output C fed back through function H **106**, to produce an error signal E that is relative to the difference between the input R and the feedback sample B. This error signal E is fed to the main element G function **104** in the forward path. If the output signal C tends to drift upwards, the error signal E pushes it back downwards and vice versa. Thus, the negative feedback system **100** stabilizes the output signal C. The negative feedback system **100** finds applications in many systems for stabilizing frequency, output power, and many other functions.

FIG. **2** illustrates a general block diagram of a standard Phase Lock Loop (PLL) **200**.

The PLL **200** is a frequency feedback system comprising a reference clock **202**, a digital phase/frequency detector (PFD) **204**, a loop filter **206**, a Voltage Controlled Oscillator (VCO) **208**, and a frequency divider **210**.

The VCO **208** is the main output block in the forward path, and is tuned to produce a frequency as set by a tuned

circuit. The VCO **208** has a frequency output F_{out} that can be changed by a control voltage V_t over a pre-set range of frequencies.

The phase detector **204** is a comparator for both the clock input F_{clock} and the feedback sample from the output F_{out} divided by divider N **210**. The phase detector **204** compares the two input frequencies F_{clock} and F_{out}/N. When the two input frequencies are not equal, the device **204** acts as a frequency discriminator and produces either a negative or positive voltage, depending on the polarity of the frequency difference between the two inputs. When the two input frequencies are the device produces an error voltage V_t relative to the phase difference between the two equal frequencies.

The loop filter **206** filters and integrates the error signal produced by the phase detector **204** and feeds it to the VCO **208**. The loop filter **206** is usually based on passive components like resistors and capacitors, but also in some cases it is a combination of active devices like operational amplifier and passive components.

The reference clock **202** is in general a low frequency crystal oscillator signal source that feeds F_{clock} to the phase detector **204**, and to which the output signal F_{out} is "locked". The reference clock **202** is set at some frequency for example a standard frequency 10 MHz The locking "mechanism" transfers some of the qualities of the reference clock **202** to the main output signal F_{out}. Its main features usually are: a) frequency stability over temperature—generally in the range of 0.1-5 ppm (parts per million), b) accuracy—Can be tuned to very high accuracy, c) very low phase noise—Its phase noise is transferred to the output signal multiplied by the ratio of 20*LOG(N) where N is the ratio between the output frequency and the clock frequency applied to the phase detector **204**.

The frequency divider **210** is based on digital devices like gates and flip-flops, through which the input frequency F_{out} is divided by a number N to produce F_{out}/N which is fed to the other input of the phase detector **204**. This number N is software controllable. The control signal comes usually from a micro controller or from a PC or from anywhere that basically will send software control to the frequency divider **210** to change the division number N. The target of the division number N is to enable the output frequency of the frequency divider **210** to be equal to the clock frequency of the reference clock **202**.

The entire operational procedures of a standard Phase Lock Loop (PLL) **200** is as follows: If an input clock signal F_{clock} is applied, usually by a reference clock **202**, the phase detector **204** compares the phase and frequency of the input signal F_{clock} with that of the VCO **208** divided by N, and generates an error voltage V_t that is related to the difference in the two signals. The error voltage V_t is then filtered and applied to the control of the VCO **208**, thereby varying the VCO **208** frequency in a direction that reduces the frequency difference between the two signals. When the frequencies of the two signals become sufficiently close, the feedback nature of the system causes the system to lock with the incoming signal. Once in lock the VCO **208** frequency divided by N is identical with the input signal F_{clock}, except for a finite phase difference which is necessary to generate the corrective error voltage V_t to shift the VCO **208** frequency to the input signal frequency F_{clock}, thus keeping the system in lock.

Any time, the division number N is changed, say for example by 1, the output frequency F_{out} jumps exactly by a step. In an example, if the reference clock **202** generates a frequency 1 MHz, then every time the division number N changes by steps of 1, the output frequency F_{out} changes by equal steps of 1 MHz.

Like all negative feedback systems, the PLL **200** has a loop bandwidth set by the component parameters and the loop filter **206**. In other words, the PLL **200** is a sophisticated frequency multiplier with a built-in narrowband, automatically tuned band-pass filter as the output frequency F_{out} is basically F_{clock} multiplied by the number N. The loop bandwidth is also responsible directly for how fast the output frequency of PLL **200** may change between different frequencies. The PLL **200** is a device where the VCO **208** is locked to a single clock reference signal which is very low but also very clean and very stable and the output frequency can be changed by equivalent steps by controlling the frequency divider **210** in the feedback loop.

FIG. **3** illustrates a simplified drawing of a digital phase/frequency detector **204**.

A phase detector or phase comparator is a frequency mixer, analog multiplier or logic circuit that generates a voltage signal which represents the difference in phase between two signal inputs. It is an essential element of the phase-locked loop (PLL). A specialized variant that additionally detects frequency is referred as Phase Frequency Detector (PFD). A phase-frequency detector is an asynchronous sequential logic circuit which determines which of the two signals has a zero-crossing earlier or more often. When used in a PLL application, lock can be achieved even when it is off frequency. Such a detector has the advantage of producing an output even when the two signals being compared differ not only in phase but in frequency.

The phase/frequency detector **204** compares two input frequencies F_{clock} and F_{out}/N. When the two input frequencies are not equal, it acts as a frequency detector and produces one or zeros to produce a voltage control V_t that pushes corresponding VCO **208** in the direction of the reference. In other words, if the VCO **208** is above the reference then the voltage control V_t is high to push the VCO **208** down and vice versa. When the two input frequencies are the same and a frequency lock is achieved, the phase detector **204** acts as a phase detector and compares the two phases, and continues to produce an error voltage to control the frequency and phase of the output device.

FIG. **4** illustrates an example of an active filter as applied to a general PLL **400**.

The kind of loop filter i.e. passive filter or active filter can be chosen on the basis of specific requirement. A passive loop filter is based on resistors and capacitors only, while an active loop filter is based on an amplifier and a capacitor-resistor network in the feedback system. A passive filter is preferred in cases where, a reference PLL is of a single frequency and will need only a single voltage in order to stay in that single frequency. The other reasons being simplicity, cost and most advantageously no addition of noise, as active devices tend to add additional noise in the system. However, active filters find more acceptances because of the possibility of amplification of the input signal. Amplification is made possible by an operational amplifier employed in the active filter.

The loop filter **206** of FIG. **2**, is an active filter that includes an operational amplifier **402** and a capacitor-resistor network **404** in the feedback loop. In some instances, the phase detector **204** of the PLL **200** may produce voltage up to 5 volts but the corresponding VCO **208** may need a voltage of above 5 volts, say, for example, up to 18 volts in

order to reach its complete range, so the active filter **206** facilitates not only filtering but also provides the capability to go to higher voltages.

FIG. **5** illustrates the principle of sample-and-hold mechanism **500**.

The first sample and hold circuit **502** includes a switch S and a hold capacitor C_H. The operation of the switch S is controlled by the sample control. When the switch S is closed, a voltage sample of the input frequency is sampled and when the switch is opened, the voltage sample is held on the hold capacitor C_H.

The second sample and hold circuit **504** includes two buffers A**1** and A**2** with unity gain for isolation purposes, in addition to the switch S and the hold capacitor C_H. The buffer A**2** is preferably an electronic buffer, so that the hold capacitor C_H does not discharge parasitically between consecutive samples. In other words, the hold capacitor C_H holds the voltage between samples.

FIG. **6** illustrates an example of practical implementation of a comb generator and sampling phase detector. The schematic shows a Step Recovery Diode (SRD) as comb generator feeding the dual schottky diode that acts as phase detector.

The implementation circuit **600** including a Step Recovery Diode (SRD) **602** as a comb generator and the dual schottky diodes **604** and **606** as a phase detector.

The input to the circuit **600** in this example is a clock input of 100 MHz sine wave. The SRD **602** is a special device that turns the 100 MHz sine wave input into a very narrow pulse train of the same frequency, so it acts as a comb generator. The two schottky diodes **604**, **606** act as switches and act as sampling switches. The RF voltage (output from corresponding VCO) to be sampled is connected to a point between the two diodes **604** and **606**. The SRD **602** creates an output of positive and negative pulses. The positive and negative pulses act as control signals to the diodes **604** and **606** that act like switches. The sampled voltage output is an error DC voltage which is created by sampling the RF input through the dual schottky diodes **604** and **606**. The output of the RF signal is sampled whenever the diodes **604** and **606** are opened by the narrow pulses coming from the SRD **602**. The voltage sample is held on the capacitors C following the diodes **604** and **606**.

FIG. **700** illustrates a schematic of the comb generator and sampling phase detector with a clock pre-amplifier and two DC buffers following the phase detector.

The voltage samples are held on two very small capacitors (which are basically the input capacitance of the voltage buffers, no need for external capacitors) on both sides of the dual diode pair, so as not to enable the whole capacitor to discharge parasitically between the samples. These capacitors are buffered by a couple of ultra-low input bias current buffers to prevent discharge between samples. The two voltages are summed, fed to a loop filter, whereby the clean V_t is fed to the VCO to control the frequency.

This implementation of sampling phase detector creates an analog phase detector, very similar to a mixer. The analog sampling phase detector has a certain defined locking space or locking distance, and it does not lock from any frequency difference like the phase/frequency digital detector. It has some locking range and only within that locking range, the VCO locks by itself on the reference. In a sampling PLL, the VCO does not lock on the reference, but on the Nth harmonic of the reference. In other words, one can lock a 9 GHz on the 90th harmonic of the 100 Megahertz clock. This is done as the input frequency is sampled every 100 cycles, not every cycle.

This type of product may contain some "search mechanism" to help lock the PLL. The most common one involves a positive feedback on the loop filter itself. While the loop is not locked, the loop filter acts as a very low frequency oscillator that drives the VCO back and forth across the frequency range. When it passes close enough to the harmonic of the clock, it will lock and stay locked. A nice feature of this mechanism is that it turns off automatically when the loop locks. This happens because of the nature of the loop as a negative feedback system.

However, this type of search mechanism suffers from many problems, its operation is subject to temperature changes and it makes this product difficult to produce, tune and sell successfully.

FIG. **800** illustrates a 64 QAM modulation scheme used in communication equipment.

Communication equipment, including different smart phones or tablets use a modulation scheme called Quadrature Amplitude Modulation (QAM). The QAM number defines the amount of points on a 2 dimensional chart that that is always the size of 1×1. The more points, the larger the density of the points. The signal has to be very clean for the points to be exactly where they are supposed to be so that the modem can decide easily. Phase noise is one of the bottlenecks that limit the data throughput. At a system level, phase noise is a statistical parameter that moves a modulation point along a curve just as a vector would move if it power would stay the same but the angle changes. If a certain modulation point moves too much on this curve, the modem will have a difficult time deciding where this point belongs and will flag an error.

In the QAM, delta ϕ or delta phase is the maximum error in degrees that is allowed to demodulate the data correctly. If the point moves by a phase of delta ϕ, it will be understood as a different point and in time the modulation scheme of course will have lot of errors. The 256 QAM allows a phase error of approximately 3 degrees in order to understand the data and the 64 QAM allows a phase error of approximately 7 degrees. By getting a better angle between 2 separate signals, one can achieve a much better more information per Hz, and a much higher data rate in modulation schemes, which can be very beneficial in many ways even improving battery life.

With our proposed ultra-low phase noise frequency synthesizers, the improved phase noise translated to degrees is better than 0.04 degrees, which when basically translated to modulation scheme can facilitate much higher modulation range. In other words, the points on the graph **800** can be much more crowded because there would be much more points in higher modulation level. The points may be much more crowded but if the phase noise is much better, it would be easy to distinguish between them without having problems of phase noise. With better phase noise, one may be able to push more information per Hz. On the same channel, one can get more information encoded and decoded. And basically it means that one can get better data rate.

FIG. **9** illustrates a phase noise plot **900** of an example free running Voltage Control Oscillator (VCO) in the frequency domain (spectrum analyzer), without being locked in a PLL.

As said before, Phase noise is a key element in many RF and radio communications systems as it can significantly affect the performance of systems. Phase noise is the frequency domain representation of rapid, short-term, random fluctuations in the phase of a waveform, caused by time domain instabilities also referred to as "jitter".

For example, in frequency domain, where the scales are amplitude vs. frequency, ideally a frequency of 100 MHz may look like a single line staying at exactly 100 MHz. However, practically with modern equipment in the laboratory, amplitude vs frequency may not look like a single line but it will look like a single line with a "skirt" **902** which goes wider and wider as we go down. The phase noise plot **900** looks like the skirt **902** on the left and the right of the exact desired frequency f_o. The quality, height, width of the skirt **902** determines how the phase noise may affect the system or the performance of the system. So, it is desirable to minimize phase noise as much as possible is to improve the system performance.

Phase noise is another term to describe short-term frequency stability. The signal generated by a frequency source is never practically "clean". Its frequency is never absolutely stable at the desired value. It has "Phase Noise" which is frequency shifting, i.e. small frequency shifts at different rates and different amplitudes of the main frequency. It changes around the center set frequency f_o at different rates and amplitudes. In time domain, the phase noise may be referred to as jitter. Long term frequency stability is drift of the center frequency over time or over temperature.

FIG. **10** illustrates a phase noise plot **1000** of an example Voltage Control Oscillator (VCO) in the frequency domain (spectrum analyzer), compensated by being locked in a PLL.

The upper line **1004** is the free running VCO phase noise, before it is locked in a PLL, and the lower line **1002** is the shaped VCO phase noise. In the PLL, the principle of locking the VCO to a reference frequency attenuates the phase noise of the VCO, in an amount related to the loop bandwidth. Outside the loop bandwidth, the VCO noise remains almost same as the phase noise without the PLL, while inside loop bandwidth it is attenuated more and more as offset frequency from the main carrier is reduced. At very high frequency, i.e. above the loop bandwidth, the locking almost has no effect, as the phase detector correction signal is not fast enough to reach the VCO for very fast changes or very fast disturbances. However, inside the loop bandwidth or at low frequencies, the compensated phase noise of the VCO is much lower than that of the free running VCO. All the frequencies that is close to the center of the frequency f_o are easy to detect and compensate.

FIG. **11** illustrates two plots **1100**: (a) a simulation of phase noise of an example PLL, and (b) an actual measurement.

FIG. **11** (*a*) illustrates a simulation graph of phase noise of an example PLL. The simulation graph shows the overall phase noise of the example PLL and includes the contribution of all the components that contribute to the phase noise. The simulation graph illustrates first, second and third regions **1102**, **1104** and **1106** of the phase noise. The first region **1102** which is very close to the carrier depicts a steep line which basically comes from the reference clock such as the Temperature Controlled Crystal Oscillator (TCXO, or any other reference clock device). The first region depicts the noise of the TCXO, multiplied by 20 log N, where N is the ratio of output frequency to the clock frequency. The second region **1104** depicts a flat phase noise which is basically the noise floor of the digital phase detector multiplied by the same ratio of 20 log N. The third region **1106** depicts a steep line which is the inherent VCO phase noise not affected by the loop bandwidth and locking phenomenon. The dashed line **1108** depicts the VCO "corrected" phase noise inside loop bandwidth. Below the flat area, the compensated VCO phase noise does not affect the overall result because it is way below the noise floor of the phase detector multiplied by that ratio. The actual measurement of phase noise of an example PLL is illustrated in FIG. **11** (*b*). One can see clearly the similarity between the two curves.

FIG. **12** illustrates a phase noise plot **1200** of a closed loop PLL, showing clearly the effect of the phase detector multiplication number 20*LOG(N) within loop bandwidth. The phase noise plot **800** illustrates phase noises on both sides of the carrier frequency f_o, where the left side is a mirrored image of the right side. The phase noises on both sides of the carrier f_o looks like it is passing through a band-pass filter.

As illustrated, on both sides, the in-band phase noise inside the loop bandwidth is flat in shape and is equal to the phase detector and/or the reference clock noise multiplied by 20 log N. At the point of the loop bandwidth, the phase noise goes up before going down again. This is due to addition of 3 dB due to a combination of phase noise of the free running VCO and the phase detector. The upper straight line **1202** depicts a phase noise contributed by the phase detector at N1 and the lower straight line **1204** depicts a phase noise contributed by the phase detector at N2. It can be seen that, there is difference in phase noise in the flat area, due to two different "N" numbers. The phase detector contributes a higher in-band phase noise at a higher value of N.

Thus, in order to achieve low phase noise, it is essential to: a) choose components such as phase detector and reference clock with the lowest inherent phase noise possible, and b) lower the ratio number N as much as possible.

FIG. **13** illustrates a plot **1300** of measurement terms of phase noise in 1 Hz bandwidth at an Δf offset frequency from the carrier.

The phase noise expression is usually in dBc, i.e. dB relative to the carrier c power level Ps, in other words how low it is compared to the carrier per Hz, in a bandwidth of 1 Hz. That is basically the term that is used for phase noise, dBc per Hertz (dBc/Hz) at a certain Δf from the carrier.

As an example for the measurement method, suppose ΔF is 10 KHz, the phase noise power level Pss is measured at the level of −70 dBm on the spectrum analyzer, and the carrier power level Ps is measured at the level of 10 dBm, the ratio between the Ps 10 dBm and the PssB −70 dBm at 10 KHz from the carrier is therefore 80 dB, so the phase noise at 10 KHz offset from carrier and is −80 dBc/Hz.

For many systems, the important parameter to evaluate performance is not the phase noise measured at a single frequency offset from the carrier, but the integrated phase noise from one offset frequency to another one. Following are four different equations and terms to define integrated phase noise:

$\int L(f)\,df$	Integrated single sideband phase noise. (dBc)
$S_{phi}(f) = (180/\pi) \cdot \sqrt{2 \cdot \int L(f)df}$	Spectral density of phase modulation, also known as RMS phase error. (degrees)
$S_{nu}(f) = \sqrt{2 \cdot \int L(f) \cdot f^2 df}$	Spectral density of frequency fluctuations, also known as RMS frequency error or residual FM. (Hz)
$S_y(f) = S_{nu}(f)/f_{osc}$	Spectral density of fractional frequency fluctuations.

For example, the first equation defines the Phase Noise in dBc. It can be translated by the 2nd equation to degrees (relevant in respect of learning modulation schemes). As per further equations, the phase noise can also be translated in terms of Hz and time domain phase jitter seconds.

FIG. **14** illustrates a general block diagram **1400** of an example dual loop PLL. The main target of the dual loop design is to reduce the number N.

The dual loop PLL **1400** includes an upper PLL **1402**, referred to as a main PLL **1402**, and a lower PLL **1404**, referred to as a reference PLL **1404**, a TCXO **1406** operating as a master clock, feeding a clock signal F_c to both the primary PLL **1402** and the reference PLL **1404**.

The reference PLL **1404** includes a first phase detector **1414**, and a single frequency first VCO **1416** that operates at a reference frequency F_r. The reference frequency F_r is fed to a first input of a down convert mixer **1412**.

The main PLL **1402** includes a second phase detector **1408** and a second VCO **1410** that generates an output frequency range F_1 to F_2. A sample of the output frequency range F_1 to F_2 is fed to the second input of the down convert mixer **1412** and mixed with a single reference frequency F_r. The output from the down convert mixer **1412** is at a much lower frequency (F_1 to F_2)$-F_r$. This lowered frequency is fed back to the second phase detector **1408** through a frequency divider **1418** of value N1.

Therefore: a) Without the down convert mixer **1412**: F_1 to $F_2=N\times F_c$, b) With the down convert mixer **1412**: (F_1 to F_2)$-F_r=N1\times F_c$. As a result there is a reduction in the number N: N1/N=((F_1 to F_2)$-F_r$)/(F_1 to F_2).

The N1 number is basically the division number that the frequency divider **1418** will use to divide the output of the mixer **1412** and feed to the second phase detector **1408**. The value of N1 is set as minimal, as the output from the mixer **1412** is at a much lower frequency than original frequency range F_1 to F_2.

To give an example: a) Suppose F_c=1 MHz, b) Suppose F_1 to F_2=10,000 to 11,000 MHz. Then N=10,000 to 11,000. Now If F_r=9000 MHz, then ((F_1-F_2)$-F_r$)=1000 to 2000 MHz. Then N1=1000 to 2000. Thus, the value of N is reduced from 11,000 to 2000. In dB, it is a ratio of 15 dB. This means, that the phase noise is reduced by a factor of 15 dB.

The disadvantage of the example dual loop design is that while nicely reducing the number N in the main PLL, the reference PLL, containing a digital phase/frequency detector becomes the main factor contributing to the overall output phase noise.

FIG. **15** illustrates a general block diagram **1500** of an example sampling PLL.

The sampling PLL **1500** includes a TCXO **1502**, a comb generator **1504**, a sampling phase detector **1506**, a loop filter **1508**, and a VCO **1510**. The sampling PLL **1500** does not include digital phase/frequency detector and frequency divider. Thus, no digital noise floor is generated that can be multiplied and affect performance of the system.

The TCXO **1502** feeds the clock signal F_{clock} to the comb generator **1504**. The comb generator **1504** is a device that changes the input sine wave signal at frequency F_{clock} to an output signal of very narrow pulses at the same frequency as the input sine wave signal.

The pulse output from the comb generator **1504** is used as a control signal to the sampling phase detector **1506**. The sampling phase detector **1506** receives an RF signal of frequency F_{out} from the VCO **1510**, and includes two diodes acting as switches to sample the RF signal by opening and closing the diodes based on the narrow pulses from the comb generator **1504**. The sampled voltage V_t produced is "held" on capacitors and buffered until the next sample period. The voltage samples are always at the same level, thus a DC voltage V_t is generated by the sampling phase detector **1506**. The loop filter **1508** cleans and filters the DC voltage Vt, and provides it to the VCO **1510** to control the VCO frequency F_{out}. $F_{out}=F_{clock}*N$, where N is the Nth spectral harmonic line in the "comb" spectrum.

FIG. **16** illustrates how the impulse or "comb" generator **1504** changes a wave shape of a signal from sine wave **1602** to narrow pulses **1604**. A frequency source **1606** generates the input sine wave **1602** of frequency F**1** and time period T**1**.

The comb generator **1504** turns the input sine wave **1602** to a series of very narrow pulses **1604** with same time period T**1**, and a pulse bandwidth as t_p in the time domain. For example, if the frequency of input sine wave **1602** is 100 MHz, then the impulse train generator **1504** generates a series of very sharp narrow pulses **1604** of the same frequency.

FIG. **17** illustrates an example output **1700** of a comb generator **1504** in the frequency domain.

In the frequency domain (spectrum analyzer screen), the output **1700** of the comb generator **1504** looks like a "comb", i.e. a row of lines extending up to very high frequency. In theory, if the bandwidth of the clock pulse is infinitesimal, the row of lines appear with equal amplitude to infinity. The output **1700** looks like a series of lines, with the spacing between the lines same as the initial frequency. In an example, if the initial frequency is 1 GHz, the spectrum of lines is 1 GHz apart.

FIG. **18** illustrates a block diagram **1800** of an ultra-low phase noise frequency synthesizer as suggested in a first embodiment.

The ultra-low phase noise frequency synthesizer **1800** includes two Phase Lock Loops (PLLs). One is a main PLL **1810** and the other one is a sampling PLL **1818**. The main PLL **1810** comprises of a high frequency low noise Direct Digital Synthesizer (DDS) **1802** to generate at least one clock signal F_{c2} of variable frequency range. The high frequency low noise DDS **1802** generates the at least one clock signal F_{c2} of variable frequency range by taking input from at least one software controllable instructions and at least one DDS clock signal. The frequency of the at least one clock signal F_{c2} is always lower than the frequency of the at least one DDS clock signal. The at least one DDS clock signal is generated by a first fixed frequency divider **1814**. The high frequency low noise DDS **1802** forwards the generated at least one clock signal F_{c2} of variable frequency range towards a Digital Phase Frequency Detector **1804**.

The Digital Phase Frequency Detector **1804** compares two signals coming from two directions and generates at least one signal. One signal is the at least one clock signal F_{c2} of variable frequency range generated by the high frequency low noise DDS **1802**. The second signal is at least one signal of frequency $F_{if}/2$ generated by a second fixed frequency divider **1812**. The Digital Phase Frequency Detector **1804** compares these two signals and generates at least one first control voltage V_{t1} and forwards it towards a primary Voltage Control Oscillator (VCO) **1806**. The primary Voltage Control Oscillator (VCO) **1806** generates at least one output signal of frequency F_{out} from the received at least one first control voltage V_{t1}. The main PLL **1810** further comprises a down convert mixer **1816**.

The primary role of the sampling PLL **1818** is to help the main PLL **1810** in reducing the phase noise present in the at least one output signal F_{out}. The sampling PLL **1818** comprises a Temperature Compensated Crystal Oscillator (TCXO) **1824** to generate at least one first clock signal of a fixed single frequency F_{c1}, a sampling phase detector **1822** (that includes the comb generator and the sampling phase

detector) to generate at least one second control voltage V_{t2} and a reference Voltage Control Oscillator (VCO) **1820**.

One important thing to notice here is that unlike other dual loop designs, the sampling reference PLL **1818** uses the sampling phase detector **1822**. The sampling PLL **1818** does not use any kind digital devices like the Digital Phase Frequency Detector **1804**, or the first fixed frequency divider N1 **1814**. Simultaneously the Temperature Compensated Crystal Oscillator (TCXO) **1824** present in the sampling PLL **1818** is also a very low noise generating device. Due to these reasons the contribution of phase noise from the sampling PLL **1818** to the main PLL **1810** becomes close to negligible. The reference Voltage Control Oscillator (VCO) **1820** generates at least one reference signal Fr and forwards it towards the down convert mixer **1816**. The sampling PLL **1818** plays a major part in all relevant communications and similar systems by being part of various frequency synthesizers, and also as a standalone frequency source for all the systems of up and down conversion processes in the same equipment.

The down convert mixer **1816** based on the received at least one reference signal of frequencies Fr and at least one output signal of frequency F_{out} generates at least one intermediate signal of frequency F_{if} and forwards it towards a second fixed frequency divider **1812**. The second fixed frequency divider **1812** generates at least one signal of frequencies $F_{if}/2$ by dividing the incoming at least one signal of frequency F_{if} by a predefined factor. The second fixed frequency divider **1812** forwards the generated at least one signal of frequencies $F_{if}/2$ towards the Digital Phase Frequency Detector **1804**. The primary VCO **1806** forwards the at least one output signal F_{out} towards a third fixed frequency divider **1808** to generate at least one final output signal $F_{outfinal}$.

It is important to notice that frequency divider **1812** is optional and the main PLL can operate without division of F_{if}.

To explain the above disclosed disclosures with an example let's say the TCXO **1824** generates the at least one first clock signal of a fixed single frequency F_{c1}250 MHz. The sampling phase detector **1822** generates the second control voltage V_{t2} by sampling the at least one first clock signal of a fixed single frequency F_{c1} 250 MHz and forwards the sampled values of the at least one first clock signal of a fixed single frequency F_{c1} 250 MHz towards the reference Voltage Control Oscillator (VCO) **1820**. The reference Voltage Control Oscillator (VCO) **1820** generates the at least one reference signal Fr and forwards it towards the down convert mixer **1816**. In an example, the reference VCO **1820** generates two reference signals having sampling frequencies of 11.75 GHz and 12.75 GHz.

In the example, the first frequency divider **1814** divides the generated **2** reference signals of frequencies 11.75 GHz and 12.75 GHz by a predefined factor of 4 to generate the at least one DDS clock signal. The high frequency low noise DDS **1802** receives the at least one DDS clock signal, and based on the at least one software controllable instructions, generates the at least one clock signal F_{c2} of variable frequency range from 0.525 GHz to 1 GHz.

In the example, the primary VCO **1806** generates the at least one output signal of frequency F_{out} ranging from 9.8 GHz to 11.7 GHz. The down convert mixer **1816** mixes the at least one output signal of frequency F_{out} ranging from 9.8 GHz to 11.7 GHz with the two reference signals F_r at frequencies 11.75 GHz or 12.75 GHz to generate the at least one intermediate signal F_{if} having frequency ranges from 1.05 GHz to 2 GHz. Since the at least one clock signal F_{c2} ranges from 0.525 GHz to 1 GHz, the second fixed frequency divider **1812** is set to divide the at least one intermediate signal F_{if} by a predefined factor of 2, to generate the at least one signal of frequencies $F_{if}/2$ ranging from 0.525 GHz to 1 GHz.

The third fixed frequency divider **1808** divides the at least one output signal F_{out} ranging from 9.8 GHZ to 11.7 GHz by a predefined factor of 2 to generate the at least one final output signal $F_{outfinal}$ ranging from 4.9 GHz to 5.85 GHz. The frequency range 4.9 GHz-5.8 GHz is basically taken from a standard design in smart phones (Wi-Fi 5 GHz Band). It is easier and relatively inexpensive to implement the chip design of the frequency synthesizer **1800** for higher output frequencies 9.8 GHZ to 11.7 GHz, and then divide the at least one output signal F_{out} by 2 to generate the at least one final output signal $F_{outfinal}$ in the range of 4.9 GHz-5.8 GHz.

The down convert mixer **1816** lowers the frequency of the at least one output signal F_{out}, to reduce ratio of the frequencies of the second clock signal and the feedback signal. Instead of feeding the at least one output signal F_{out} directly to the Digital Phase Frequency Detector **1804**, it is mixed down to create at least one signal with much lower frequency, and obtain a much lower value of the second fixed frequency divider **1812**.

As the primary phase noise present in the ultra-low phase noise frequency synthesizer **1800** is due to the product of the noise present in the high frequency DDS **1802** and the second fixed frequency divider **1812**, the more less the value of the second fixed frequency divider **1812** will be, the more less will be the generated phase noise in the ultra-low phase noise frequency synthesizer **1800**. Therefore when the second fixed frequency divider **1812** is equal to 2, the DDS signal noise is multiplied by the number 2 and this achieves a very ultra-low noise.

The reduction in the ratio of the frequencies leads to a reduction in a phase noise of the final output signal $F_{outfinal}$. The comparison frequency is much lower, so that the number N by which the noise is multiplied inside the main PLL **1810** is much lower. In an example, the ratio of second fixed frequency divider=2 reduces the phase noise of the final output signal $F_{outfinal}$ by a factor of 20-40 dB compared to a single PLL design, to enable an improved modulation scheme with higher data transfer rate. For example, phase noise at 100 KHz Δf from the carrier with standard PLL synthesizers is approximately −106 dBc/Hz. With the proposed frequency synthesizer **1800**, the phase noise at 100 KHz Δf from the carrier could be in the range of −130 dBc/Hz, causing a significant improvement of 24 dB.

As said, this significant improvement of 24 dB in the phase noise enables implementation of higher complicated modulation schemes. For example, instead of current 256 QAM, if phase noise can be reduced by a factor of more than 20 dB, then a modulation scheme of 4096 QAM may be allowed. In other words, in the same bandwidth, one can use modulation scheme with much higher data rate, thus increasing the efficiency of the channel.

Translated to practical aspects, the ultra-low phase noise frequency synthesizer **1700** can give 10% cost savings, 10% improved battery life on Wi-Fi system, and 20 to 50% higher Wi-Fi data rate potential, and has major market potential in Cellular phones and mobile applications, or any other wireless communication system, to be used by smartphone or other integrated circuit designers and manufacturers, module makers and vendors that have PA, LNA, Switch and other related technology.

To summarize, the drastic improvements achieved in reducing phase noise in the ultra-low phase noise frequency

synthesizer **1800** is based on the following: a) use of Dual PLL approach to reduce the multiplication number N2, b) use of sampling PLL **1818** as the reference PLL, to make its noise contribution and reference PLL phase noise negligible, c) use of DDS **1802** to provide low noise, high frequency input to the main PLL **1810**, and d) use of high frequency Digital Phase Frequency Detector **1804** in the main PLL **1810**.

In this embodiment the ultra-low phase noise frequency synthesizer **1800** is implemented in form of a module. In another form of this embodiment, this design of the ultra-low phase noise frequency synthesizer **1800** can be implemented not only as a part of big module, but also as an independent, separate chip, which can become a part of the front end module of a transceiver. The synthesizer can be implemented in an advanced technology for example but not limited to, like SiGe or GaAs.

One other practical aspect the ultra-low phase noise frequency synthesizer **1800** is that they may be used to remove non-linearities due to digital pre-distortion mechanism. The ultra-low phase noise frequency synthesizer **1800** is used with high linearity mixer to down convert the transmit signal. The mechanism suggested as a solution does not intend to use the receive path and thus aims to remove all the nonlinearities created by the receive path itself. This occurs inside a front end module that houses the Power amplifier with a mechanism for signal sampling, the ultra-low phase noise frequency synthesizer **1800**, a mixer, an ND converter, an LNA for the receive path. This way the entire DPD data extraction happens within the same part and as the power amplifier itself and a minimum of other distortions is added to the transmit signal. The attached SOC may now be provided with digital data that includes the nonlinearities of the transmit signal and a much smaller, rather negligible part of nonlinearities with regard to the use of the receive path or any other down conversion.

FIG. **19** illustrates a block diagram **1900** of an ultra-low phase noise frequency synthesizer as suggested in a second embodiment.

The low phase noise frequency synthesizer **1900** includes two Phase Lock Loops (PLLs). One is a main PLL **1912** and the other one is a sampling PLL **1918**. In this embodiment, the ultra low phase noise frequency synthesizer **1900** comprises one single TCXO (Temperature Compensated Crystal Oscillator) **1902** which provides input clock signals to both the main PLL **1912** and the sampling reference PLL **1918**.

The main PLL **1912** comprises of a Fractional-N synthesizer chip **1904**, a primary Voltage Controlled Oscillator (VCO) **1910** and a down convert mixer **1916**. The Fractional-N synthesizer chip **1904** includes a high frequency Digital Phase Detector **1906** and a software controllable variable frequency divider N **1908**.

The TCXO **1902** forwards the generated at least one clock signal of fixed frequency F_c towards the high frequency Digital Phase Detector **1906** which is located inside the Fractional-N synthesizer chip **1904**. On one hand the high frequency Digital Phase Detector **1906** receives the at least one clock signal of fixed frequency F_c. On the other hand the high frequency Digital Phase Detector **1906** receives at least one signal of frequency F_{if}/N generated by the software controllable variable frequency divider N **1908**. The high frequency Digital Phase Detector **1906** compares these two signals, generates at least one first control voltage V_{t1} and then forwards the generated at least one first control voltage V_{t1} towards the primary VCO **1910**. The primary VCO **1910** generates at least one output signal of frequency F_{out} from the received at least one first control voltage V_{t1}.

The primary role of the sampling PLL **1918** is to help the main PLL **1912** to reduce the phase noise present in the at least one output signal F_{out}. The sampling PLL **1918** comprises a sampling phase detector **1922** and a reference Voltage Control Oscillator (VCO) **1920**.

One important thing to notice here is the application of the sampling phase detector **1922**. The sampling PLL **1918** does not use any kind digital devices like the Digital Phase Detector **1906**, or the software controllable variable frequency divider N **1908**. Due to these reasons the contribution of phase noise from the sampling PLL **1918** to the main PLL **1912** becomes close to negligible.

The sampling phase detector **1922** receives the same at least one clock signal of fixed frequency F_c generated by the TCXO **1902**, generates at least one second control voltage V_{t2} and forwards it towards the reference VCO **1920**. The reference VCO **1920** generates at least one reference signal Fr and forwards it towards the down convert mixer **1916**.

The down convert mixer **1916** based on the received at least one reference signal of frequency F_r and the at least one output signal of frequency F_{out} generates at least one intermediate signal of frequency F_{if} and forwards it towards the software controllable variable frequency divider N **1908** located inside the Fractional-N synthesizer chip **1904**. The software controllable variable frequency divider N **1908** generates at least one signal of frequencies F_{if}/N by dividing the incoming at least one intermediate signal of frequency F_{if} by at least one variable value of N. The Fractional-N synthesizer chip **1904** varies the value of N by executing appropriate software instructions. The software controllable variable frequency divider N **1908** then forwards the generated at least one signal of frequency F_{if}/N towards the Digital Phase Detector **1906**.

The primary VCO **1910** forwards the at least one output signal F_{out} towards a first fixed frequency divider **1914** and generate at least one final output signal $F_{outfinal}$ by dividing the at least one output signal F_{out} by a pre-defined factor.

To explain the second embodiment with an example let's say the TCXO **1902** generates the at least one clock signal of fixed frequency F_c 100 MHz Both the main PLL **1912** and the sampling PLL **1918** are fed by the single TCXO **1902**. The phase noise of the sampling PLL **1918** is generally very low due to the principle of sampling and also to the presence of the input clock TCXO **1902** which is itself a very low noise generating device.

The sampling phase detector **1922** generates the second control voltage V_{t2} based on the at least one clock signal of fixed frequency F_c 100 MHz and forwards the second control voltage V_{t2} towards the reference VCO **1920**. The reference VCO **1920** generates at least one reference signal Fr and forwards it towards the down convert mixer **1916**. In an example, the reference VCO **1920** generates two reference signals of frequencies 11.75 GHz and 12.75 GHz.

In the example, the primary VCO **1910** generates the at least one output signal of a frequency F_{out} ranging from 9.8 GHz to 11.7 GHz. The down convert mixer **1916** mixes the at least one output signal of frequency F_{out} ranging from 9.8 GHz to 11.7 GHz with the two reference signal of frequencies 11.75 GHz and 12.75 GHz to generate the at least at least one intermediate signal of frequency F_{if} ranging from 1.05 GHz to 2 GHz.

Based on the at least one clock signal of fixed frequency F_c, the Fractional-N synthesizer chip **1804** determines the value of the software controllable variable frequency divider N **1808**, so as to generate at least one feedback signal of frequency $F_f=F_{if}/N$.

The frequency range 4.9 GHz-5.8 GHz is basically taken from a standard design in smart phones (Wi-Fi 5 GHz Band). It is easier and relatively inexpensive to implement the chip design of the low phase noise frequency synthesizer **1900** for higher output frequencies 9.8 GHZ to 11.7 GHz, and then divide the output frequencies by 2 to obtain the final output frequencies in the range of 4.9 GHz-5.8 GHz.

The down convert mixer **1916** lowers the frequency of the output signal F_{out}, to reduce a ratio of frequencies of the second clock signal and the feedback signal. Instead of feeding the output frequency F_{out} directly to the Digital Phase Detector **1906**, it is mixed down to create a much lower frequency, and thus a much lower value of N. A reduction in the ratio of the at least one clock signal of frequency F_c and the at least one feedback signal of frequency F_f leads to a reduction in a phase noise of the final output signal $F_{outfinal}$. The feedback frequency is lowered down, so that the number N by which the noise is multiplied inside the main PLL **1912** is also lowered down. If the output frequency F_{out} is in the range of 11 GHz, and it has to be compared with a clock of 100 MHz, the ratio N of 11 GHz and 100 MHz is around 100, but if the output frequency F_{out} is mixed down to 1 GHz by the down convert mixer **1916**, then the ratio N of 1 GHz and 100 MHz may be only 10 instead of 100, thereby significantly reducing the phase noise of the low phase noise frequency synthesizer **1900**.

The improvement in the phase noise of the low phase noise frequency synthesizer **1900** is based on following: a) use of dual PLL to reduce the multiplication number N, b) use of sampling PLL **1918** as the reference PLL to make its noise contribution negligible, c) use of high frequency low noise TCXO clock **1902** to provide high frequency input to the main PLL **1912**, d) use of high frequency Fractional-N synthesizer **1914** in the primary PLL **1906**.

In this second embodiment, the ultra-low phase noise frequency synthesizer **1900** is implemented in form of a module. In another form of this embodiment, this design of the ultra-low phase noise frequency synthesizer **1900** can be implemented not only as a part of big module, but also as an independent, separate chip, which can become a part of the front end module of a transceiver. The ultra-low phase noise frequency synthesizer **1900** can also be implemented in advanced technology for example like SiGe or GaAs.

FIG. **20** illustrates a block diagram **2000** of the sampling Phase Lock Loop (PLL) system as suggested in a third embodiment.

The sampling PLL system **2000** includes a Temperature Compensated Crystal Oscillator (TCXO) **2002**, a comb generator **2004**, a sampling phase detector **2006**, a two-way DC switch **2008**, a loop filter **2010**, a Voltage Controlled Oscillator (VCO) **2012**, and a Digital Phase Frequency Detector **2014**. The TCXO **2002** is configured to generate at least one clock signal of frequency F_c z, which is applied to both of the comb generator **2004** and the Digital Phase Frequency Detector **2014**. The sampling PLL system **2000** contains two PLL loops. One is a Sampling PLL loop **2016** and the other is a Digital PLL loop **2018**.

The principle of operation in this embodiment is this: Initially the two-way DC switch **2008** remaining closed with the Digital Phase Frequency Detector **2014**. Due to this only the Digital PLL loop **2018** is remains operational and the VCO **2012** gets locked to the at least one clock signal of frequency F_c generated by the reference clock TCXO **2002**. The Digital Phase Frequency Detector **2014** also generates at least one lock detect signal V_{ld}.

Once VCO **2012** gets locked to the at least one clock signal of frequency F_c generated by the reference clock TCXO **2002**, the at least one lock detect signal V_{id} generated by the Digital Phase Frequency Detector **2014** changes the two-way DC switch **2008** to the Sampling PLL loop **2016**. Due to this the Sampling PLL loop **2016** gets closed and the Digital PLL loop **2018** gets opened. Since the VCO **2012** is already locked at the correct frequency, the Sampling PLL loop **2016** will remain closed. One important thing to notice here is that the loop filter **2010** is common to both the Sampling PLL loop **2016** and the Digital PLL loop **2018**. As the loop filter **2010** is made up of a plurality of resistors and capacitors which are charged to the right tuning voltage V_t which is applied to the VCO **2012**. When the Sampling PLL loop **2016** gets closed and the Digital PLL loop **2018** gets opened, the plurality of resistors and capacitors present in the loop filter **2010** do not change their tuning voltages in that step. In other words, the Digital PLL loop **2018** is used to lock the VCO **2012** with the exact right frequency generated by the TCXO **2002** and the Sampling PLL loop **2016** is used to achieve low phase noise.

The two-way DC switch **2008** is configured to be switched between the sampling phase detector **2006** and the Digital Phase Frequency Detector **2014** based on a status of the lock detect signal V_{ld} generated by the Digital Phase Frequency Detector **2014**. For example, the two-way DC switch **2008** is configured to be connected to the Digital Phase Frequency Detector **2014** when the lock detect signal V_{ld} is low, and configured to be connected to the sampling phase detector **2006** when the lock detect signal V_{ld} is high.

In the third embodiment, when the lock detect signal V_{ld} is low, the two-way DC switch **2008**, the loop filter **2010**, the VCO **2012** and the Digital Phase Frequency Detector **2014**, forms a Digital PLL loop **2018**. Whereas, when the lock detect signal V_{ld} is high, the comb generator **2004**, the sampling phase detector **2006**, the two-way DC switch **2008**, the loop filter **2010**, and the VCO **2012** forms a sampling PLL loop **2016**.

As said, initially, the two-way DC switch **2008** is connected to the Digital Phase Frequency Detector **2014**, as the lock detect signal V_{ld} is low due unlock state. In the Digital PLL loop **2018**, the Digital Phase Frequency Detector **2014** generates a first DC output signal V_{td} based on a comparison of the at least one clock signal of frequency Fc, and at least one output signal of frequency F_r, the loop filter **2010** filters the first DC output signal V_{td} and generates the control voltage V_t, and the VCO **2012** generates the output signal frequency based on the control voltage V_t. In an example, the VCO **2012** is configured to generate either an output signal of frequency F_r of 11.75 GHz or 12.75 GHz chosen by software control to the Digital PLL loop **2018**.

As soon as the Digital PLL loop **2018** is locked at the output frequency F_r, the lock detect signal V_{ld} turns high, the two-way DC switch **2008** disconnects from the Digital Phase Frequency Detector **2014** and connects to the sampling phase detector **2006**, forming the sampling PLL loop **2016**.

So once locked, the lock detector signal V_{ld} from the Digital Phase Frequency Detector **2014** controls the two-way DC switch **2008** to switch to the sampling PLL **2016**. The loop filter **2010** contains plurality of capacitors and resistors that are already charged to the correct tuning voltage V_t of the VCO **2012**, and since voltage on the plurality of capacitors and resistors cannot change in a "jump", there would not be any transient, and the VCO **2012** may continue receiving the same control voltage V_{td}. The sampling PLL system **2000** remains locked at the same frequency but now through the sampling phase mechanism.

In the Sampling PLL loop **2016**, the comb generator **2004** receives the at least one clock signal of frequency F_c and generates at least one comb signal F_{comb}. The at least one comb signal F_{comb} is basically a plurality of narrow pulses, which are repeating at the same frequency F_c which is the frequency of the at least one clock signal generated by the TCXO **2002**. The sampling phase detector **2006** after receiving the at least one comb signal F_{comb} generates a second DC output signal V_{ts} based on the at least one comb signal F_{comb}. The loop filter **2010** generates the control voltage V_t based on the second DC output signal V_{ts} and the VCO **2012** remains locked at the output frequency F_r based on the control voltage V_t.

At the execution of lock by the Digital Phase Frequency Detector **2014**, the first DC output signal V_{td} becomes equal to the second DC output signal V_{ts}. Further, the loop filter **2010** is common to the sampling PLL loop **2016** and the Digital PLL loop **2018** so as to maintain a similar control voltage V_{ts} while switching from the Digital PLL loop **2018** to the sampling PLL loop **2016** and vice versa.

Another feature is that if by any chance, the sampling PLL loop **2010** loses a lock with the phase of the clock signal, the lock detect signal V_{ld}, which is still active, turns low to re-connect the two-way DC switch **2008** to the Digital Phase Frequency Detector **2014** to enable re-locking of the Digital PLL loop **2018** to the clock signal.

In this embodiment, the sampling PLL system **2000** is implemented in an independent chip form, with digital circuits replacing analog functions. The sampling PLL system **2000** may also be implemented as a block on a system on chip (SoC) or as a part of a module. The sampling PLL system **2000** may also be used in the ultra-low phase noise frequency synthesizers **1800** and **2000**.

In this embodiment, the Digital PLL loop **2018** always locks at the correct frequency as the Digital PLL loop **2018** is software controlled to lock at a right frequency. The Digital Phase Frequency Detector **2014** is always able to lock from any distance regardless of how far away initially the VCO **2012** is from the reference clock F_c. Thus, use of the Digital PLL loop **2018** in the sampling PLL system **2000** overcomes the problem of the sampling PLL loop **2016** not being able to lock outside the lock range. The Digital PLL loop **2018** is used to lock the VCO **2012** on the right frequency and then switch to the sampling PLL loop **2016** to achieve the low noise. It also enables the system to operate with a wideband RF VCO **2012** with assurance that it will lock at the correct frequency. It eliminates the unreliable search mechanism and assures lock under all conditions and temperature conditions by providing true lock detect indication. The presence of Digital Phase Frequency Detector **2014** enables the use of wideband VCO **2012** in the sampling PLL loop **2016**, as the Digital Phase Frequency Detector **2014** is able to lock the VCO **2012** at any desired frequency. The sampling PLL system **2000** offers a significant improvement over other products and is highly useful as one of the most important building blocks for ultra-low noise synthesizers.

In the sampling PLL loop **2016**, there is no digital noise floor and the reference clock F_c determines the overall phase noise, as this is the only factor that is translated to the output frequency by 20 log N.

Advantages of the sampling PLL system **2000**: a) It enables the sampling PLL **2016** to operate with a wideband RF VCO with assurance that it will lock at the correct frequency, b) It eliminates the unreliable search mechanism and assures lock under all offset and temperature conditions, c) It provides true lock detect indication, d) Reliable improved operation and performance of the sampling PLL **2016**, e) Ultra-low noise, f) Highly reliable, g) Having vastly improved performance, h) Easy to manufacture and use, i) Operational in a broadband RF range, and j) Implementable in a chip form.

FIG. **21** illustrates a phase noise simulation plot **2100** contributed by a DDS chip in accordance with the first embodiment of the present invention.

The two dimensional phase noise simulation plot **2100** comprises of an ordinate (vertical axis) disclosing Phase Noise (dBc/Hz) **2102** and one abscissa (horizontal axis) disclosing Frequency (Hz) **2104**. The phase noise simulation plot **2100** discloses four phase noise plots corresponding to four input frequencies which are 1396 MHz **2106**, 696 MHz **2108**, 427 MHz **2110** and 171 MHz **2112** generated by the single DDS chip.

In the first embodiment of the present disclosure as disclosed above in FIG. **18**, the DDS **1802** element generates at least one clock signal F_{c2} of a variable frequency range of 0.525 GHz to 1 GHz. Correlating this variable frequency range of 0.525 GHz to 1 GHz applicable in the first embodiment of the present disclosure with the DDS phase noise simulation plot **2100**, it becomes evidently clear that even in worst case scenario the DDS phase noise contribution in the first embodiment of the present disclosure stays in between the 1396 MHz **2106** and the 696 MHz **2108** which is in between −112 dBc/Hz and −110 dBc/Hz which is still very much negligible.

FIG. **22** illustrates a phase noise simulation plot **2200** contributed by the main PLL **1810** in accordance with the first embodiment of the present disclosure.

The two dimensional phase noise simulation plot **2200** comprises of an ordinate (vertical axis) disclosing Phase Noise (dBc/Hz) **2202** and one abscissa (horizontal axis) disclosing Frequency (Hz) **2204**. The phase noise simulation plot **2200** discloses the phase noise contributed by the main PLL **1810** as disclosed in the first embodiment of the present disclosure in FIG. **18**. It is evidently visible that the phase noise simulation plot **2200** has multiple contributors. The two most important contributors of phase noise in the phase noise simulation plot **2200** are the primary VCO **1806** and the DDS **1802** as discussed in FIG. **18**.

A phase noise plot **2208** is the contribution of the primary VCO **1806** in the phase noise simulation plot **2200**. As the primary VCO **1806** belongs to the main PLL **1810**, the main PLL **1810** attenuates the phase noise **2208** coming from the primary VCO **1806** to quite an extent. This attenuation is clearly visible in the phase noise simulation plot **2200**.

The other primary contributor in the phase noise simulation plot **2200** is the phase noise coming from the DDS **1802** present in the first embodiment of the present disclosure. A phase noise plot **2212** is the contribution of the DDS **1802** into the main PLL **1810**. The phase noise plot **2212** is titled as XTAL in the phase noise simulation plot **2200**. This phase noise plot **2212** is the contribution of the DDS **1802** in the main PLL **1810** at a worst point of an output frequency of 1000 MHz.

The main PLL **1810** forwards the primary VCO **1806** generated output frequencies of 9.8 GHz-11.7 GHz towards the down convert mixer **1816**. The down convert mixer **1816** mixes incoming the primary VCO **1806** generated output frequencies of 9.8 GHz-11.7 GHz with the sampling reference frequencies of 11.75 GHz and 12.75 GHz and generates a attenuated intermediate frequencies of 1.05 GHz to 2 GHz. This attenuation procedure itself reduces the phase noise

contributions coming from the primary VCO **1806** and the DDS **1802**. It can be further note that a phase detector noise floor plot **2214** is negligible.

FIG. **23** illustrates a phase noise simulation plot **2300** contributed by a reference sampling PLL when a TCXO clock generates input frequencies of 100 MHz in accordance with the first embodiment of the present disclosure.

The two dimensional phase noise simulation plot **2300** comprises of an ordinate (vertical axis) disclosing Phase Noise (dBc/Hz) **2302** and one abscissa (horizontal axis) disclosing Frequency (Hz) **2304**. The phase noise simulation plot **2300** discloses the phase noise contributed by the reference sampling PLL **1818** as disclosed in the first embodiment of the present disclosure in FIG. **18**. It is evidently visible that the phase noise simulation plot **2300** has multiple contributors. The two most important contributors of phase noise in the phase noise simulation plot **2300** are the reference VCO **1820** and the TCXO **1824** as discussed in FIG. **18**.

A phase noise plot **2308** is the contribution of the reference VCO **1820** in the phase noise simulation plot **2300**. The reference sampling PLL **1818** attenuates the phase noise plot **2308** coming from the primary VCO **1806** to quite an extent. This attenuation is clearly visible in the phase noise simulation plot **2300**.

The other primary contributor in the phase noise simulation plot **2300** is the phase noise coming from the TCXO **1824** present in the first embodiment of the present disclosure. A phase noise plot **2310** is the contribution of the TCXO **1824** into the reference sampling PLL **1818**. The phase noise plot **2310** is titled as XTAL in the phase noise simulation plot **2300**. This phase noise plot **2310** is the contribution of the TCXO **1824** in the reference sampling PLL **1818**, when the TCXO **1824** is generating input frequencies of 100 MHz.

The reference sampling PLL **1818** forwards the generated sampling reference frequencies of 11.75 GHz and 12.75 GHz towards the down convert mixer **1816**. The down convert mixer **1816** mixes this generated sampling reference frequencies of 11.75 GHz and 12.75 GHz with the incoming frequencies of 9.8 GHz-11.7 GHz to generate a attenuated intermediate frequencies of 1.05 GHz to 2 GHz. This attenuation procedure itself reduces the phase noise contributions coming from the reference VCO **1820** and the TCXO **1824**.

FIG. **24** illustrates a phase noise simulation plot **2400** contributed by a reference sampling PLL when a TCXO clock generates input frequencies of 250 MHz in accordance with the first embodiment of the present disclosure.

The two dimensional phase noise simulation plot **2400** comprises of an ordinate (vertical axis) disclosing Phase Noise (dBc/Hz) **2402** and one abscissa (horizontal axis) disclosing Frequency (Hz) **2404**. The phase noise simulation plot **2400** discloses the phase noise contributed by the reference sampling PLL **1818** as disclosed in the first embodiment of the present disclosure in FIG. **18**. It is evidently visible that the phase noise simulation plot **2400** has multiple contributors. The two most important contributors of phase noise in the phase noise simulation plot **2400** are the reference VCO **1820** and the TCXO **1824** as discussed in FIG. **18**.

A phase noise plot **2408** is the contribution of the reference VCO **1820** in the phase noise simulation plot **2400**. The reference sampling PLL **1818** attenuates the phase noise plot **2408** coming from the primary VCO **1806** to quite an extent. This attenuation is clearly visible in the phase noise simulation plot **2400**.

The other primary contributor in the phase noise simulation plot **2400** is the phase noise coming from the TCXO **1824** present in the first embodiment of the present invention. A phase noise plot **2410** is the contribution of the TCXO **1824** into the reference sampling PLL **1818**. The phase noise plot **2410** is titled as XTAL in the phase noise simulation plot **2400**. This phase noise plot **2410** is the contribution of the TCXO **1824** in the reference sampling PLL **1818**, when the TCXO **1824** is generating input frequencies of 250 MHz.

The reference sampling PLL **1818** forwards the generated sampling reference frequencies of 11.75 GHz and 12.75 GHz towards the down convert mixer **1816**. The down convert mixer **1816** mixes this generated sampling reference frequencies of 11.75 GHz and 12.75 GHz with the incoming frequencies of 9.8 GHz-11.7 GHz to generate a attenuated intermediate frequencies of 1.05 GHz to 2 GHz. This attenuation procedure itself reduces the phase noise contributions coming from the reference VCO **1820** and the TCXO **1824**.

FIG. **25** illustrates a phase noise simulation plot **2500** contributed by a main PLL in accordance with the second embodiment of the present disclosure.

The two dimensional phase noise simulation plot **2500** comprises of an ordinate (vertical axis) disclosing Phase Noise (dBc/Hz) **2502** and one abscissa (horizontal axis) disclosing Frequency (Hz) **2504**. The phase noise simulation plot **2500** discloses the phase noise contributed by the main PLL **1912** as disclosed in the second embodiment of the present disclosure in FIG. **19**. The primary difference between the phase noise simulation plot **2500** and the above plots of FIGS. **22**, **23** and **24** is that there is no DDS present in the second embodiment of the present disclosure. The most important contributor of phase noise in the phase noise simulation plot **2500** is the TCXO **1902** as discussed in FIG. **19**.

A phase noise plot **2512** is the contribution of the TCXO **1902** into the main PLL **1910**. The phase noise plot **2512** is titled as XTAL in the phase noise simulation plot **2500**. Due to the absence of any DDS in the second embodiment of the present invention, a phase detector plot **2510** becomes a major factor.

The main PLL **1912** forwards the primary VCO **1910** generated output frequencies of 9.8 GHz-11.7 GHz towards the down convert mixer **1916**. The down convert mixer **1916** mixes incoming the primary VCO **1910** generated output frequencies of 9.8 GHz-11.7 GHz with the sampling reference frequencies of 11.75 GHz and 12.75 GHz and generates attenuated intermediate frequencies of 1.05 GHz to 2 GHz. This attenuation procedure itself reduces the phase noise contributions coming from the TCXO **1902**.

FIG. **26** illustrates a phase noise simulation plot **2600** contributed by a reference sampling PLL having the TCXO clock generating input frequencies of 100 MHz in accordance with the second embodiment of the present disclosure.

The two dimensional phase noise simulation plot **2600** comprises of an ordinate (vertical axis) disclosing Phase Noise (dBc/Hz) **2602** and one abscissa (horizontal axis) disclosing Frequency (Hz) **2604**. The phase noise simulation plot **2600** discloses the phase noise contributed by the reference sampling PLL **1918** as disclosed in the second embodiment of the present disclosure in FIG. **19**.

The primary contributor in the phase noise simulation plot **2600** is the phase noise coming from the TCXO **1902** present in the second embodiment of the present disclosure. A phase noise plot **2610** is the contribution of the TCXO **1902** into the reference sampling PLL **1918**. The phase noise

plot **2610** is titled as XTAL in the phase noise simulation plot **2600**. This phase noise plot **2610** is the contribution of the TCXO **1902** in the reference sampling PLL **1918**, when the TCXO **1902** is generating input frequencies of 100 MHz.

The reference sampling PLL **1918** forwards the generated sampling reference frequencies of 11.75 GHz and 12.75 GHz towards the down convert mixer **1816**. The down convert mixer **1916** mixes this generated sampling reference frequencies of 11.75 GHz and 12.75 GHz with the incoming frequencies of 9.8 GHz-11.7 GHz to generate a attenuated intermediate frequencies of 1.05 GHz to 2 GHz.

FIG. **27** illustrates a phase noise simulation plot **2700** contributed by a reference sampling PLL having the TCXO clock generating input frequencies of 250 MHz in accordance with the second embodiment of the present disclosure.

The two dimensional phase noise simulation plot **2700** comprises of an ordinate (vertical axis) disclosing Phase Noise (dBc/Hz) **2602** and one abscissa (horizontal axis) disclosing Frequency (Hz) **2604**. The phase noise simulation plot **2700** discloses the phase noise contributed by the reference sampling PLL **1918** as disclosed in the second embodiment of the present disclosure in FIG. **19**.

The primary contributor in the phase noise simulation plot **2700** is the phase noise coming from the TCXO **1902** present in the second embodiment of the present disclosure. A phase noise plot **2710** is the contribution of the TCXO **1902** into the reference sampling PLL **1918**. The phase noise plot **2710** is titled as XTAL in the phase noise simulation plot **2700**. This phase noise plot **2710** is the contribution of the TCXO **1902** in the reference sampling PLL **1918**, when the TCXO **1902** is generating input frequencies of 250 MHz.

The reference sampling PLL **1918** forwards the generated sampling reference frequencies of 11.75 GHz and 12.75 GHz towards the down convert mixer **1816**. The down convert mixer **1916** mixes this generated sampling reference frequencies of 11.75 GHz and 12.75 GHz with the incoming frequencies of 9.8 GHz-11.7 GHz to generate a attenuated intermediate frequencies of 1.05 GHz to 2 GHz.

FIG. **28** illustrates a flow chart **2800** depicting the operational methods of the first embodiment in accordance with the present disclosure.

At step **2802**, the Reference Sampling PLL receives clock signals from a TCXO, generates sampling frequencies to eliminate digital noise floor and forwards the sampling frequencies towards a Down Convert Mixer

At step **2804**, the Main PLL receives clock signals from a low noise frequency generator DDS, generates the output frequencies and forwards them towards the Down Convert Mixer.

At step **2806**, the Down Convert Mixer which is a part of the Main PLL receives frequencies coming from both the Main PLL and the Reference Sampling PLL, mixes them to reduce a multiplication number N to achieve high data rate, high modulation schemes and low phase deviation errors.

FIG. **29** illustrates a flow chart **2900** depicting the operational methods of the second embodiment in accordance with the present disclosure.

At step **2902**, the Reference Sampling PLL receives clock signals from a TCXO, generates sampling frequencies to eliminate digital noise floor and forwards the sampling frequencies towards a Down Convert Mixer

At step **2904**, the Main PLL receives clock signals from the same TCXO, generates the output frequencies and forwards them towards the Down Convert Mixer.

At step **2906**, the Down Convert Mixer which is a part of the Main PLL receives frequencies coming from both the Main PLL and the Reference Sampling PLL, mixes them to reduce a multiplication number N to achieve high data rate, high modulation schemes and low phase deviation errors.

FIG. **30** illustrates a flow chart **3000** depicting the operational methods of the third embodiment in accordance with the present disclosure.

At step **3002**, a TCXO generates clock signals of low noise frequency ranges from 100 MHz till 250 MHz.

At step **3004**, a Sampling Phase Detector receives the clock signals and eliminates digital noise floor.

At step **3006**, a Digital PLL is added with the Sampling PLL to improve performance and reliability of an Ultra Low Phase Noise Frequency Synthesizer to achieve high data rates, high modulation schemes and low phase deviation errors.

While the invention has been described in detail, modifications within the spirit and scope of the invention will be readily apparent to those of skill in the art. Such modifications are also to be considered as part of the present disclosure. In view of the foregoing discussion, relevant knowledge in the art and references or information discussed above in connection with the Background, which are all incorporated herein by reference, further description is deemed unnecessary. In addition, it should be understood that aspects of the invention and portions of various embodiments may be combined or interchanged either in whole or in part. Furthermore, those of ordinary skill in the art will appreciate that the foregoing description is by way of example only, and is not intended to limit the invention.

The foregoing discussion of the present disclosure has been presented for purposes of illustration and description. It is not intended to limit the present disclosure to the form or forms disclosed herein. In the foregoing Detailed Description, for example, various features of the present disclosure are grouped together in one or more embodiments, configurations, or aspects for the purpose of streamlining the disclosure. The features of the embodiments, configurations, or aspects may be combined in alternate embodiments, configurations, or aspects other than those discussed above. This method of disclosure is not to be interpreted as reflecting an intention the present disclosure requires more features than are expressly recited in each claim. Rather, as the following claims reflect, inventive aspects lie in less than all features of a single foregoing disclosed embodiment, configuration, or aspect. Thus, the following claims are hereby incorporated into this Detailed Description, with each claim standing on its own as a separate embodiment of the present disclosure.

Moreover, though the description of the present disclosure has included description of one or more embodiments, configurations, or aspects and certain variations and modifications, other variations, combinations, and modifications are within the scope of the present disclosure, e.g., as may be within the skill and knowledge of those in the art, after understanding the present disclosure. It is intended to obtain rights which include alternative embodiments, configurations, or aspects to the extent permitted, including alternate, interchangeable and/or equivalent structures, functions, ranges or steps to those claimed, whether or not such alternate, interchangeable and/or equivalent structures, functions, ranges or steps are disclosed herein, and without intending to publicly dedicate any patentable subject matter.

What is claimed is:

1. A system, comprising:

at least one ultra-low phase noise frequency synthesizer, wherein the at least one ultra-low phase noise frequency synthesizer comprises:

(i) at least one clocking device configured to generate at least one clock signal of at least one clock frequency;

(ii) at least one sampling Phase Locked Loop (PLL), wherein the at least one sampling PLL comprises:

(a) at least one sampling phase detector configured to receive the at least one clock signal and a single reference frequency to generate at least one first analog control voltage; and

(b) at least one reference Voltage Controlled Oscillator (VCO) configured to receive the at least one first analog control voltage or at least one second analog control voltage to generate the single reference frequency, wherein at least one digital control voltage controls which of the at least one first analog control voltage or the at least one second analog control voltage is received by the at least one reference VCO;

(iii) at least one main Phase Locked Loop (PLL), wherein the at least one main PLL comprises:

(a) at least one Fractional-N synthesizer, wherein the at least one Fractional-N synthesizer comprises:

(1) at least one high frequency Digital Phase/Frequency detector configured to receive and compare the at least one clock frequency and at least one feedback frequency to generate the at least one second analog control voltage and at least one digital control voltage; and

(2) at least one variable frequency divider configured to divide at least one intermediate signal by a predetermined factor N to generate at least one feedback signal of the at least one feedback frequency;

(b) at least one main VCO configured to receive at least one third analog control voltage and generate at least one output signal of at least one output frequency; and

(c) at least one down convert mixer configured to mix the at least one output frequency and the single reference frequency to generate the at least one intermediate signal of at least one intermediate frequency.

2. The system of claim **1**, wherein the at least one ultra-low phase noise frequency synthesizer further comprises at least one fixed frequency divider configured to receive and divide the at least one output signal generated by the at least one main PLL by a predefined factor to generate at least one final output signal of at least one final output frequency.

3. The system of claim **2**, wherein the at least one final output frequency ranges from 4.9 GHz to 5.85 GHz.

4. The system of claim **2**, wherein the predefined factor is 2.

5. The system of claim **1**, wherein the at least one clocking device comprises a Temperature Compensated Crystal Oscillator (TCXO).

6. The system of claim **5**, wherein the at least one clock frequency is between 10 MHz to 250 MHz, inclusive.

7. The system of claim **5**, wherein the Temperature Compensated Crystal Oscillator (TCXO) operates as a low phase noise frequency input to both the at least one sampling PLL and the at least one main PLL.

8. The system of claim **1**, wherein the single reference frequency is one of 11.75 GHz and 12.75 GHz.

9. The system of claim **1**, wherein the at least one output frequency is one of 9.8 GHz and 11.7 GHz.

10. The system of claim **1**, wherein the at least one intermediate frequency is between 1.05 GHz and 2 GHz, inclusive.

11. The system of claim **1**, wherein the at least one down convert mixer lowers the at least one output frequency of the at least one output signal to reduce a ratio of frequencies of the at least one clock signal and the at least one feedback signal.

12. The wireless system of claim **11**, wherein a reduction in the ratio of the frequencies of the at least one clock signal and the at least one feedback signal results in a reduction in a phase noise present in the at least one output signal.

13. The system of claim **1**, wherein the at least one ultra-low phase noise frequency synthesizer is used at a transmitter end to resolve Digital Pre-Distortion (DPD) impurities in transmitter output signals.

14. The system of claim **1**, wherein the system comprises one of a radar communication system, a satellite communication system, a Long Term Evolution (LTE) communication system, and a military communication system.

15. The system of claim **1**, wherein the at least one ultra-low phase noise frequency synthesizer implemented in form of an independent chip.

16. The system of claim **1**, wherein the at least one ultra-low phase noise frequency synthesizer is implemented inside a System on Chip (SoC).

17. The system of claim **1**, wherein the at least one ultra-low phase noise frequency synthesizer reduces phase deviation for error ($\Delta\phi$) to less than 0.04°.

* * * * *